Handbook

# F-R60K

## Fire Damper with Quick Mount Kit

# Table of Contents

# Overview

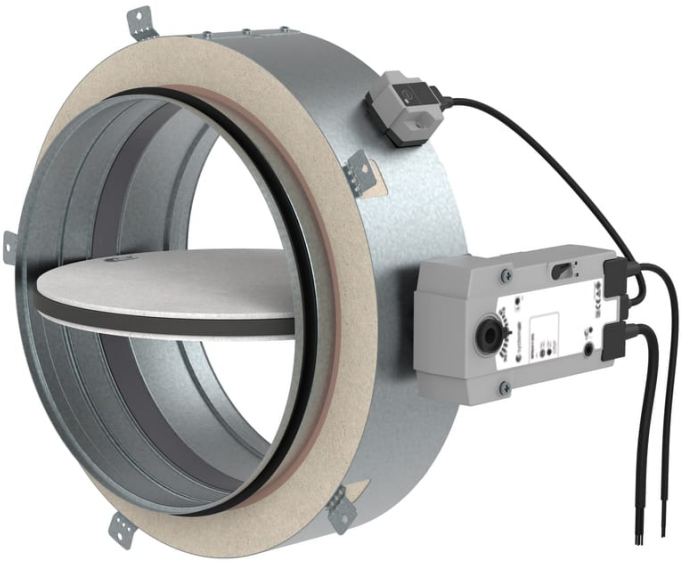

# Description

Fire dampers represent passive fire protection, designed with the help of compartmentalization to prevent the spread of toxic gases, smoke and fire. The opening and closure of the damper blade can be activated remotely. In case of fire, when the air in the duct exceeds 72 °C or 74 °C, the thermal fuse melts. Melting of the thermal fuse activates the closure of the damper blade automatically. Damper blade is then mechanically locked in closed position.

## Highlights

- Greatly reduced installation time
- 100 mm body length
- On & out of shaft wall installations
- On sandwich panel wall installation
- Manual mechanism with end position switches
- Easy thermal fuse inspection and change
- Easy actuator and unit access
- Casing leakage according to EN 1751, class C
- Blade leakage according to EN 1751, class 3

## Fire Resistivity

F-R60K fire dampers are CE certified following the Construction Products Regulation according to EN 15650:2010. Tested according to EN 1366-2:2015 and classified according to EN 13501-3 + A1:2009. The fire damper together with its installation form an inseparable part of the fire resistivity rating. F-R60K fire dampers are designed for the installations listed and described in their Handbook.

- Standard supporting construction in accordance with EN 1366-2:2015: **EI60 ($v_e$ - $h_o$ i↔o)S**
- Shaft wall – 2 layer, one side covered plasterboard construction: **EI60($v_e$ - i↔o)S**
- Sandwich panel wall – non-loadbearing wall, double sided steel horizontal panel, with mineral wool core: **EI60($v_e$ - i↔o)S**

## Accessories

Detailed information about accessories is available on design.systemair.com

- FCR: Flexible Duct Connection
- R1-F-R60K: Ringlet for Out Installation

# Design

## Material Composition

F-R60K damper has galvanized sheet metal casing. High temperature resistant insulation ring around the casing from expanded vermiculite board with inorganic binder. The vermiculite boards are not harmful to health and do not contain any asbestos, glass or mineral fibers. Blades are made from non-asbestos calcium silicate board with polyurethane foam seals for cold smoke and an intumescent seal, that expands in case of fire. Ethylene-propylene rubber used as duct seal. The product contains no hazardous substances, except for the solder in the thermal fuse, which contains one milligram of lead. All materials are processed in accordance with local regulations.

## Activation Types

### Manually Operated Fire Dampers

By default, manually operated fire dampers are supplied with manual control, optionally with micro switches. In case of fire, the fire damper is closed automatically. The actuating mechanism is activated when the temperature of the air in the duct reaches 74 °C and the damper closes within 10 seconds after fuse melts.

- **H0**

Fire damper with an activation mechanism with a cover, manual crank and with a spring return release mechanism activated by a fusible thermal link set to 74 °C.

- **H2**

Fire damper with an H0 activation mechanism + open and closed indication with AC 230 V or AC/DC 24 V contact switches.

### Actuator Operated Fire Dampers

By default, actuator operated fire dampers are supplied with an actuator with micro switches, optionally with a power and communication unit. A fire damper can be equipped with a spring return actuator can be closed with command from the building management system, or after the breaching of the thermoelectric fuse. Actuator operated fire dampers are standardly equipped with a thermoelectric fuse, that activates the closing of the damper after the reaching or exceeding of the ambient temperature of 72°C. The actuator power circuit is interrupted, and its spring closes the damper blade within 20 seconds.

- **B230T** or **G230T**

Fire damper with an activation mechanism with a Belimo or Gruner spring return actuator (AC 230 V) with electro-thermal fuse 72°C and auxiliary switches.

- **B24T** or **G24T**

Fire damper with an activation mechanism with a Belimo or Gruner spring return actuator (AC/DC 24 V) with electro-thermal fuse 72°C and auxiliary switches.

- **B24T-W** or **G24T-W**

Fire damper with an activation mechanism with a Belimo or Gruner spring return actuator (AC/DC 24 V) with an electro-thermal fuse 72°C and auxiliary switches, with provided cable connectors for the supply and communication unit (communication unit not part of the mechanism).

- **B24T-SR** or **G24T-SR**

Fire damper with an activation mechanism with a Belimo or Gruner spring return actuator (AC/DC 24 V) with electro-thermal fuse 72°C and auxiliary switches for Modulated dampers (possibility to open the blade at the desired angle).

- **GST0**

Fire damper with an activation mechanism with a Gruner spring return actuator (AC/DC 24 V) with an electro-thermal fuse 72°C and auxiliary switches, with a Gruner supply and communication unit FSC-UFC24-2 (Modbus/BACnet).

- **BST1**

Fire damper with an activation mechanism with a Belimo spring return actuator (AC/DC 24 V) with an electro-thermal fuse 72°C and auxiliary switches, with a supply and communication unit (SLC powered) BC24-G2 (THC).

- **BST2**

Fire damper with an activation mechanism with a Belimo spring return actuator (AC/DC 24 V) with an electro-thermal fuse 72°C and auxiliary switches, with a Belimo supply and communication unit (AC 230 V) BKN230-24-MOD (Modbus/BACnet).

- **BST10**

Fire damper with an activation mechanism with a Belimo spring return actuator (AC/DC 24 V) with an electro-thermal fuse 72°C and auxiliary switches, with a Belimo supply and communication unit (AC 230 V) BKN230-24-PL (Powerline).

Other communication units are possible on demand.

# Technical Parameters

| | |
|---|---|
| **Durability Test** | |
| • 50 cycles | • No change of the necessary properties. |
| • 10000 cycles, actuator controlled (0 ... 90 degrees rotation) | • No change of the necessary properties. |
| • 10000 cycles, actuator controlled for modular possibility (45 ... 60 degrees rotation) | • No change of the necessary properties. |
| **Fire Testing Pressure** | Under-pressure up to 300 Pa |
| **Safety Position** | Closed - In case of fire the damper closes via a spring in the actuator or a spring in the manual mechanism |
| **Possible Installations** | Refer to the "Installation" section |
| **Direction of the Airflow** | Both direction |
| **Permitted air Velocity** | Damper can still operate at max. 12 m/s. air without any mechanical or chemical contamination |
| **Side with Fire Protection** | Both sides: (i<->o) - symmetrical |
| **Repeated opening** | Suitable for daily check procedure in suitable environment |
| **Activation Temperature** | Manually operated: 74 °C by means of a spring after the melting of the thermal fuse |
| **Activation Temperature** | Actuator operated: 72 °C by means of the spring after current interruption in the electro-thermal fuse |
| **Environmental Conditions for Operation** | |
| Minimum temperature: | 0 °C |
| Maximum temperature: | 60 °C for 74 °C and 72 °C thermal fuse |
| Relative humidity: | Less than 95% (3K5, EN 60721-3-3) |
| Product protected from: | Weather, rain and water from other sources |
| Condensation: | Cannot form on the product |
| Icing: | Cannot form on the product |
| **Open/Closed indication** | Manually operated - Activation type H0 visually (arrow on the mechanism) and H2 with microswitches<br>Actuator operated - built-in microswitches |
| **Closing/Opening time** | Manually operated < 10 s, Actuator operated < 20 s |
| **Access for Inspection** | Inspection of blade and gaskets can be done through thermal fuse hole with endoscopic camera. To have the possibility to access the damper internals a flexible connection or duct with access doors must be connected to the damper. |
| **Maintenance** | Maintenance is not necessary. A dry-cleaning procedure can be mandatory in some countries or when needed. |
| **Inspections** | Obey local laws for the minimum time between inspection procedures. When not specified the maximum interval between inspections is 12 months |
| **Allowed pressure** | 1200 Pa |
| **Tightness of the Blade (EN 1751)** | Class 3 as standard up to 2500 Pa |
| **Tightness of the Housing (EN 1751)** | Class C as standard up to 2500 Pa |
| **EC Directives** | |
| 2006/42/EC Machinery Directive | |
| 2014/35/EU Low Voltage Directive | |
| 2014/30/EU Electromagnetic Compatibility Directive | |
| **Driving Actuator Types** | |
| Belimo BFL...T-..., BFN...-T-... | ...230; ...24; ...24-W; ...24-ST; ...24-SR |
| Gruner 340-...-05, 360-...-12 | ...230; ...24; ...24-W; ...24-ST; ...24-SR |
| **Transportation and Storage** | The temperature range must be: -20...50 °C |

Make sure that the damper blade is in the closed position during transportation and protected from weather disruptions. The storage of the damper must be indoors.

## Product Parts

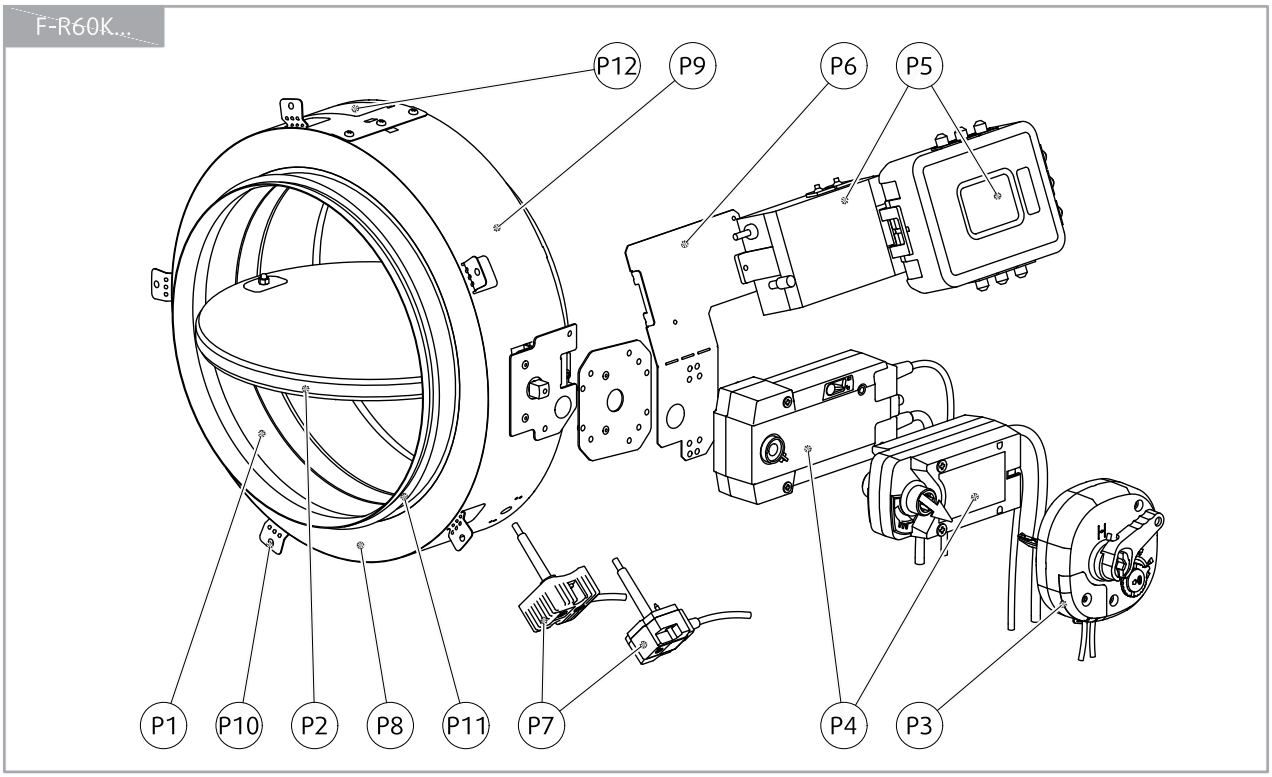


Note:
Depicting only BST2. Other activation types will look differently.

Legend:

**P1** - Damper casing
**P2** - Damper blade
**P3** - Manual mechanism with thermal fuse
**P4** - Actuator
**P5** - Communication unit
**P6** - Holder for communication unit (only for B24T-W and G24T-W activation types)
**P7** - Thermal fuse of Actuator
**P8** - High temperature insulating ring
**P9** - Sheet metal ring cover
**P10** - Bendable hangers
**P11** - Duct connection sealings
**P12** - Product label

# Assessed Performance

21 **CE** 1396

**Systemair Production a.s.**

Hlavná 371, 900 43 Kalinkovo, Slovakia

| | |
|---|---|
| 1396-CPR-0194 | **F-R60K** |
| **EN 15650 : 2010** | |
| Circular fire damper | |
| **Nominal Activation Conditions/Sensitivity** | **Pass** |
| Sensing element load bearing capacity | |
| Sensing element response temperature | |
| **Closure During Test at Correct Time and in Allowable Time** | **Pass** |
| **Operational Reliability** | **Pass** |
| Manual mechanism = 50 cycles | |
| Actuator mechanism = 10 200 cycles: 0° to 90° | |
| Actuator mechanism = 10 000 cycles: 45° to 60° | |
| **Fire resistance:** | **EI60($v_e$-$h_o$-i↔o)S** |
| Resistivity depends on installation method and situation | |
| • integrity | **E** |
| • maintenance of the cross section | (under E) |
| • mechanical stability | (under E) |
| • insulation | **I** |
| • smoke leakage | **S** |
| **Durability of Response Delay** | |
| Sensing element response temperature and load bearing capacity | **Pass** |
| **Durability of Operational Reliability** | |
| Open and closing cycle | **Pass** |

# Diagrams

The pressure drop and A-weighted total discharged sound power level depend on the nominal diameter of the damper and air flow volume at different duct pressures. The type of activation does not influences the airflow parameter, therefore the activation type is not shown in the diagrams.

### F-R60K-...-?

Pressure drop & A-weighted sound power level in dB(A)

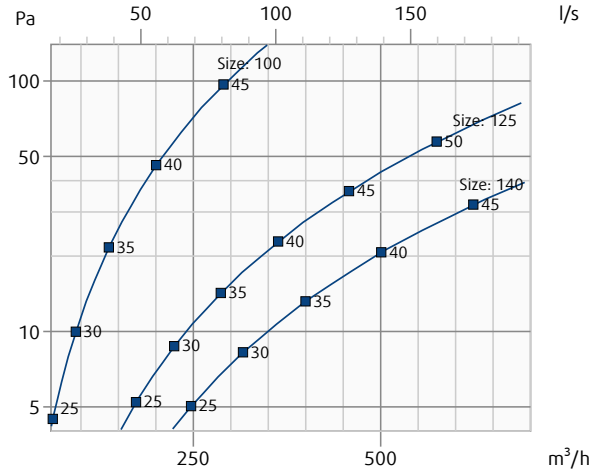


### F-R60K-...-?

Pressure drop & A-weighted sound power level in dB(A)

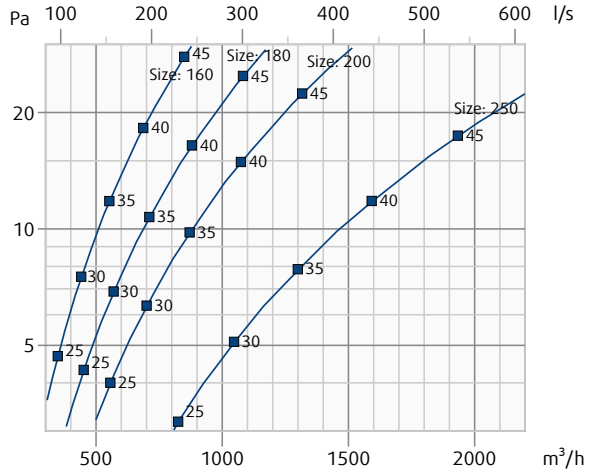


### F-R60K-...-?

Pressure drop & A-weighted sound power level in dB(A)

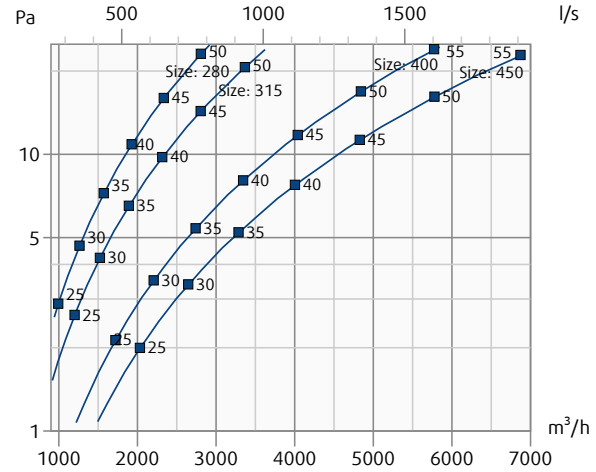


### F-R60K-...-?

Pressure drop & A-weighted sound power level in dB(A)

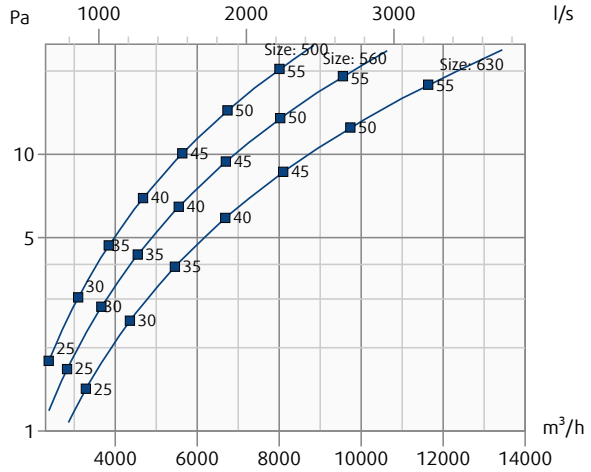


Legend:

**$p_s$** (Pa) - Pressure drop

**$q_v$** (m3^/h), (l/s) - Air flow volume

**±Δ** (%) - Deviation from measured value

**$L_{wa}$** (dB(A)) - A-weighted total sound power level

**v** (m/s) - Air face velocity

# Dimensions & Weights

## Free Area

| $A_v$ ($m^2$) | DN (mm) | | | | | | | | | | | | | | | | |
|---|---|---|---|---|---|---|---|---|---|---|---|---|---|---|---|---|---|
| | 100 | 125 | 140 | 150 | 160 | 180 | 200 | 225 | 250 | 280 | 315 | 355 | 400 | 450 | 500 | 560 | 630 |
| | 0,065 | 0,069 | 0,072 | 0,074 | 0,076 | 0,081 | 0,087 | 0,094 | 0,103 | 0,115 | 0,130 | 0,150 | 0,176 | 0,208 | 0,244 | 0,292 | 0,356 |

## Dimensions

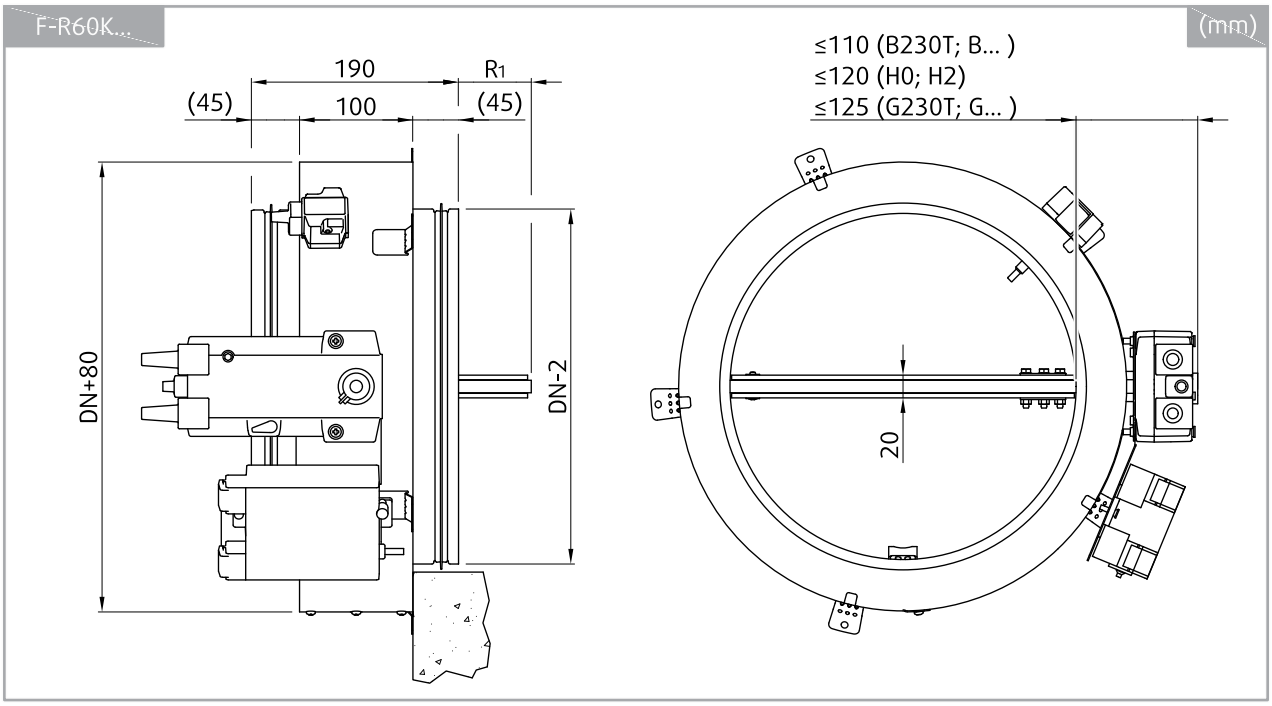


Note:

**H0**, **H2** - Manual activation types

**B...** - Belimo activation types

**G...** - Gruner activation types

## Overhangs

| R1 (mm) | DN (mm) | | | | | | | | | | | | | | | | |
|---|---|---|---|---|---|---|---|---|---|---|---|---|---|---|---|---|---|
| | 100 | 125 | 140 | 150 | 160 | 180 | 200 | 225 | 250 | 280 | 315 | 355 | 400 | 450 | 500 | 560 | 630 |
| | -48,0 | -35,0 | -27,5 | -22,5 | -18,0 | -7,5 | 2,0 | 15,0 | 27,0 | 42,5 | 60,0 | 77,0 | 102,0 | 127,0 | 152,0 | 182,0 | 217,0 |

## Weights

| m (kg) | DN (mm) | | | | | | | | | | | | | | | | |
|---|---|---|---|---|---|---|---|---|---|---|---|---|---|---|---|---|---|
| | 100 | 125 | 140 | 150 | 160 | 180 | 200 | 225 | 250 | 280 | 315 | 355 | 400 | 450 | 500 | 560 | 630 |
| H0, H2 | 3,2 | 3,4 | 3,8 | 3,8 | 3,8 | 4,2 | 4,5 | 5,0 | 5,5 | 6,1 | 7,2 | 8,6 | 10,7 | 13,4 | 15,0 | 18,0 | 21,1 |
| B230T | 4,7 | 4,9 | 5,3 | 5,3 | 5,3 | 5,7 | 6,0 | 6,5 | 7,0 | 7,6 | 8,7 | 10,1 | 12,2 | 14,9 | 16,5 | 19,5 | 22,6 |
| G230T | 4,8 | 5,0 | 5,4 | 5,4 | 5,4 | 5,8 | 6,1 | 6,6 | 7,1 | 7,7 | 8,8 | 10,2 | 12,3 | 15,0 | 16,6 | 19,6 | 22,7 |
| GST0 | 5,3 | 5,5 | 5,9 | 5,9 | 5,9 | 6,3 | 6,6 | 7,1 | 7,6 | 8,2 | 9,3 | 10,7 | 12,8 | 15,5 | 17,1 | 20,1 | 23,2 |
| B24T | 4,7 | 4,9 | 5,3 | 5,3 | 5,3 | 5,7 | 6,0 | 6,5 | 7,0 | 7,6 | 8,7 | 10,1 | 12,2 | 14,9 | 16,5 | 19,5 | 22,6 |
| B24T-W | 4,7 | 4,9 | 5,3 | 5,3 | 5,3 | 5,7 | 6,0 | 6,5 | 7,0 | 7,6 | 8,7 | 10,1 | 12,2 | 14,9 | 16,5 | 19,5 | 22,6 |
| B24T-SR | 4,7 | 4,9 | 5,3 | 5,3 | 5,3 | 5,7 | 6,0 | 6,5 | 7,0 | 7,6 | 8,7 | 10,1 | 12,2 | 14,9 | 16,5 | 19,5 | 22,6 |
| G24T | 4,8 | 5,0 | 5,4 | 5,4 | 5,4 | 5,8 | 6,1 | 6,6 | 7,1 | 7,7 | 8,8 | 10,2 | 12,3 | 15,0 | 16,6 | 19,6 | 22,7 |
| G24T-W | 4,8 | 5,0 | 5,4 | 5,4 | 5,4 | 5,8 | 6,1 | 6,6 | 7,1 | 7,7 | 8,8 | 10,2 | 12,3 | 15,0 | 16,6 | 19,6 | 22,7 |
| G24T-SR | 4,8 | 5,0 | 5,4 | 5,4 | 5,4 | 5,8 | 6,1 | 6,6 | 7,1 | 7,7 | 8,8 | 10,2 | 12,3 | 15,0 | 16,6 | 19,6 | 22,7 |

# Ordering Code

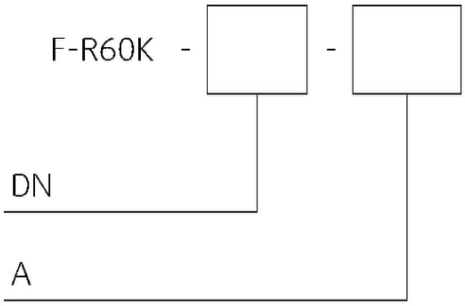


## DN

Dimension, øDN:
100, 125, 140, 150, 160, 180, 200, 225, 250, 280, 315, 355, 400, 450, 500, 560, 630 mm

## A - Type of Activation

**H0** - Manual crank, no switches

**H2** - Manual crank, 2 switches 230V AC or 24V AC/DC

**B230T** - 230V AC Belimo Actuator

**G230T** - 230V AC Gruner Actuator

**B24T** - 24V AC/DC Belimo Actuator

**G24T** - 24V AC/DC Gruner Actuator

**B24T-W** - 24V AC/DC Belimo Actuator & Wire connector for communication unit

**G24T-W** - 24V AC/DC Gruner Actuator & Wire connector for communication unit

**B24T-SR** - 24V AC/DC Belimo Actuator, modulated 0 V ...10 V

**G24T-SR** - 24V AC/DC Gruner Actuator, modulated 0 V ...10 V

**GST0** - 24V AC/DC Supply and communication unit FSC-UFC24-2 (Modbus/BACnet) & 24V AC/DC Gruner spring return Actuator

**BST1** - SLC powered supply and communication unit BC24-G2 (THC) & 24V AC/DC Belimo spring return actuator

**BST2** - 230 V AC Supply and communication unit BKN230-24-MOD (Modbus/BACnet) & 24V AC/DC Belimo spring return actuator

**BST10** - 230 V AC supply and communication unit BKN230-24-PL (Powerline) & 24V AC/DC Belimo spring return actuator

## Example of the F-R60K Fire Damper Ordering Code

F-R60K-630-B24T-SR

Fire damper with nominal diameter 630 mm, with insulation ring for on and out of the wall EI60S installation. Activated by thermal fuse and a 24 V Modulated Belimo actuator (0 V ...10 V) that can be used for airflow balancing.

# Installation

| | | | | |
|---|---|---|---|---|
| ON | F-R60K<br>DN100 ... DN630 | EI 60 ($v_e$ - i ↔ o) S | a) 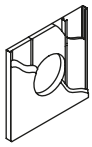 ≥ 100 mm<br>b) 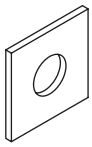 ≥ 100 mm |  <br>360° |
| | | | d) 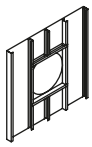 ≥ 80 mm | |
| | | | e) 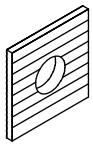 ≥ 100 mm | |
| | | EI 60 ($h_o$ - i ↔ o) S | c) 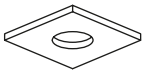 <br>≥ 100 mm<br>≥ 620 kg/m³ | |

| | | | | |
|---|---|---|---|---|
| OUT | F-R60K<br>DN100 ... DN630 | EI 60 ($v_e$ - i ↔ o) S | a) 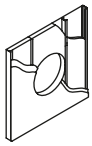 ≥ 100 mm<br>b) 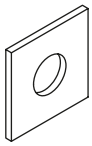 ≥ 100 mm |  <br>360° |
| | | | d) 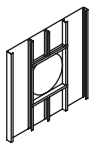 ≥ 80 mm | |
| | | EI 60 ($h_o$ - i ↔ o) S | c) 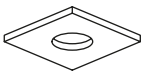 <br>≥ 100 mm<br>≥ 620 kg/m³ | |

Notes:

**a)** - Flexible (plasterboard) wall
**b)** - Concrete/masonry/cellular concrete (rigid) wall
**c)** - Concrete/cellular concrete (rigid) floor/ceiling
**d)** - Shaft wall - one side covered with 2 layers of gypsum board
**e)** - Sandwich wall - non-loadbearing wall, double sided steel horizontal panel, with mineral wool core
**$v_e$** - Vertical wall placement
**$h_o$** - Horizontal floor/ceiling placement

## Installation Rules

- The duct connected to the fire damper must be supported or hung in such a way that the damper does not carry its weight. The damper must not support any part of the surrounding construction or wall which could cause damage and consequent damper failure.
- Easy access to mechanism and internal parts during inspection must be considered during damper placement.
- According to the standard EN 1366-2, the distance between the fire damper bodies must be at least 200 mm. This condition does not apply for tested distances. Therefore installations ON standard walls and ceilings are approved for smaller distances. See the minimum separation distances on the installation pictures.
- The distance between the adjacent wall/ceiling and the damper must be at least 75 mm. This condition does not apply for tested distances. Therefore installations ON standard walls and ceilings are approved for smaller distances. See the minimum separation distances on the installation pictures.
- When the damper is installed into a fire partition structure, it must be placed so that the damper blades in its closed position are located inside this structure.
- The gap in the installation opening between the damper and the wall/ceiling can be increased by up to 50% of the gap area or decreased to the smallest amount possible that still provides sufficient space for the installation of the seal.
- The damper must be earthed after being installed into the duct.
- Lists of all permitted installation methods are provided in Handbook.

## Installation, Maintenance & Operation

Some damper parts may have sharp edges – therefore to protect yourself from harm, please use gloves during damper installation and manipulation. In order to prevent electric shock, fire or any other damage which could result from incorrect damper usage and operation, it is important to:

1. Ensure that installation is performed by a trained person.
2. Follow the written and depicted instructions provided within Handbook closely.
3. Perform damper inspection in accordance with Handbook.
4. Check the damper's functionality as per the chapter "Functionality Check" before you install the damper. This procedure prevents the installation of a damper that has been damaged during transportation or handling.

Information about installation, maintenance and operation is available in the "HandBook_F-R60K" document or more can be found at design.systemair.com.

# Installation ON a Wall

## Standard Flexible & Rigid Wall

**IMPORTANT: The insulation ring cannot be delivered separately! The insulation ring is delivered pre-mounted on a damper.**

1. The supporting construction opening must be prepared as depicted in wall preparation. Opening surfaces must be even and cleaned off.
2. The opening dimension D1 is driven by the nominal dimensions of the damper with added clearance. The flexible wall opening must be reinforced as per the standards for plasterboard walls when a vertical beam was breached with the opening.
3. Insert the duct into the opening with its end flush with the supporting construction on the side where the fire damper will be mounted.
4. Bend outwards hangers on the metal sheet covering ring.
5. Apply a suitable fire resistive caulk (F2) to the fire damper insulation ring on the wall connection side.
6. Insert the damper into the duct and fix the insulation ring through bendable hangers to the wall with screws (F1).
7. If needed, uncover and clean the damper after installation.
8. Check the damper's functionality

## Installation Distances

According to the standard EN 1366-2, the minimum distance from the wall or ceiling to the duct holding the fire damper is 75 mm. For multiple crossings through a fire resistive wall the minimum distance between the duct opening is 200 mm. This applies for distances between the duct holding the damper and a nearby foreign object crossing the fire-resistive wall.

## Installation - Smaller Distances

The distance between 2 individual fire dampers can be reduced to 80 mm, measured from surface to surface of the housing and the distance between the surface of the damper kit installed in the duct and the adjacent supporting construction (wall/ floor) can be reduced to 15 mm.

| | | | | | |
|---|---|---|---|---|---|
| ON | F-R60K<br>DN100 ... DN630 | EI 60 ($v_e$ - i ↔ o) S | a) 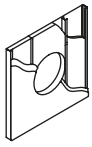 <br>≥ 100 mm | b) 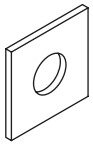 <br>≥ 100 mm |  <br>360° |

Notes:

**a)** - Flexible (plasterboard) wall

**b)** - Concrete/masonry/cellular concrete (rigid) wall

**$v_e$** - Vertical wall placement

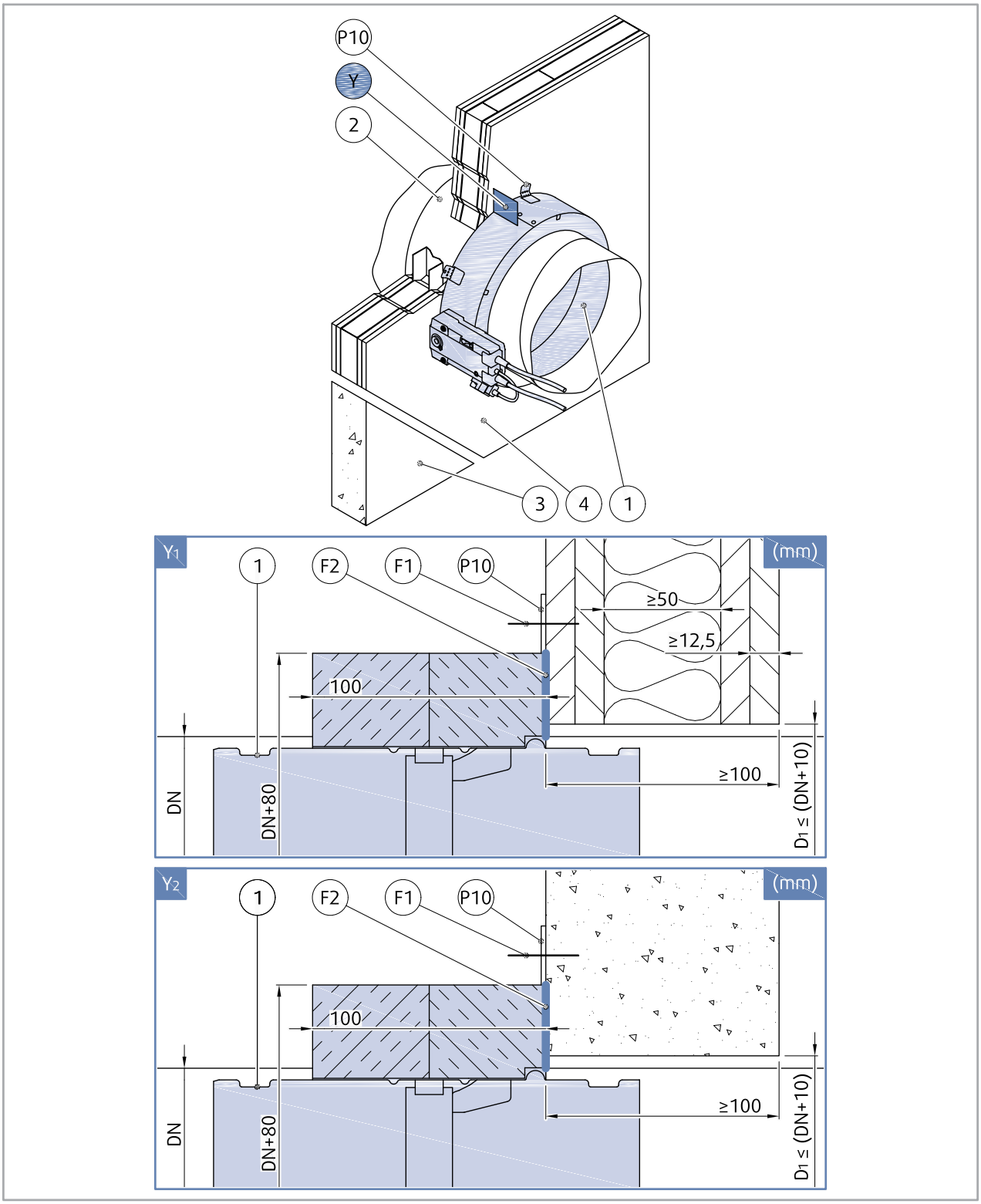
P10
Y
2
3
4
1
Y1
(mm)
1
F2
F1
P10
≥50
≥12,5
100
DN
DN+80
≥100
D1 ≤ (DN+10)
Y2
(mm)
1
F2
F1
P10
100
DN
DN+80
≥100
D1 ≤ (DN+10)

## Opening and Wall and/or Ceiling Preparations

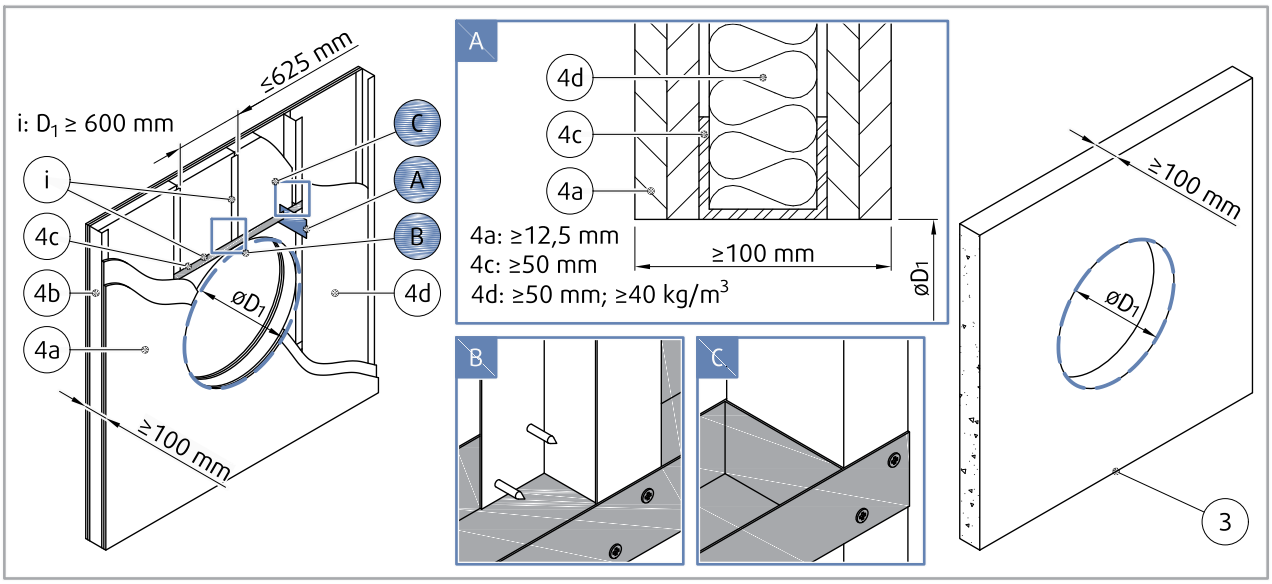


## Damper Minimum Distances

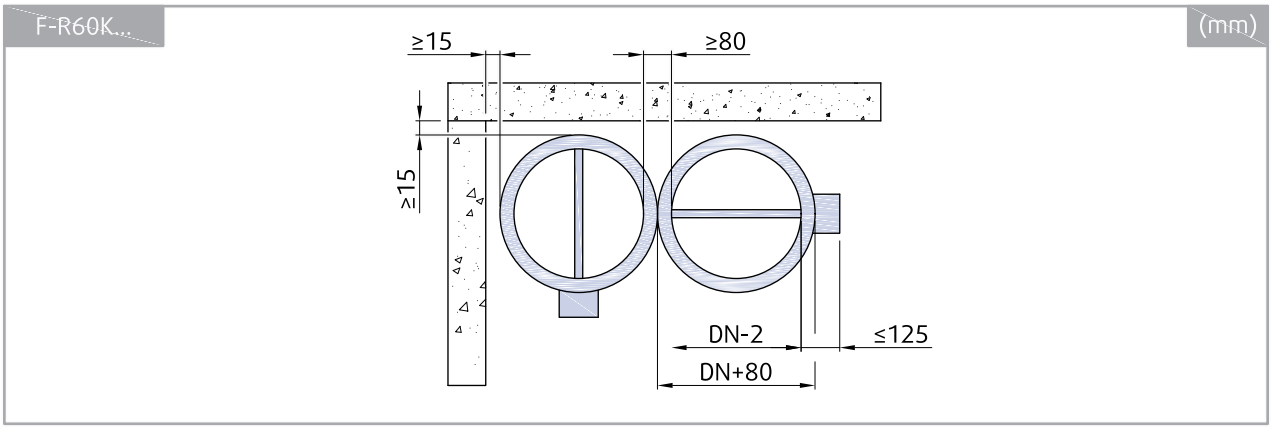


Legend for Installation ON a wall

**1** - Fire damper (F-R60K)

**2** - Duct

**3** - Concrete/masonry/cellular concrete wall or ceiling

**4** - Flexible (plasterboard) wall

**4a** - 2 layers of plasterboard fireproof plate type F, EN 520

**4b** - Vertical CW – profiles

**4c** - Horizontal CW – profiles

**4d** - Mineral wool; thickness/cubic density see picture

**P10** - Bendable hanger (part of the sheet metal ring cover)

**F1** - Screw d=4; e.g. DIN7981

**F2** - Fire resistive coating, Kleber K84/Promat or Grena-klebepaste/Grena

# Installation ON a Shaft Wall

## One Side Gypsum Covered Wall - 2 Layers

**IMPORTANT: The insulation ring cannot be delivered separately! The insulation ring is delivered pre-mounted on a damper.**

1. The supporting construction opening must be prepared as depicted in wall preparation. Opening surfaces must be even and cleaned off.
2. The opening dimension D1 is driven by the nominal dimensions of the damper with added clearance. The flexible wall opening must be reinforced as per the standards for plasterboard walls when a vertical beam was breached with the opening.

Note: Damper installation side is the opposite to the shaft wall beam side.

3. Insert the duct into the opening with its end flush with the supporting construction on the side where the fire damper will be mounted.
4. Bend outwards hangers on the metal sheet covering ring.
5. Apply a suitable fire resistive caulk (F2) to the fire damper insulation ring on the wall connection side.
6. Insert the damper into the duct and fix the insulation ring through bendable hangers to the wall with screws (F1) into the wall beams or with plugs for gypsum boards.
7. If needed, uncover and clean the damper after installation.
8. Check the damper's functionality

## Installation Distances

According to the standard EN 1366-2, the minimum distance from the wall or ceiling to the duct holding the fire damper is 75 mm. For multiple crossings through a fire resistive wall the minimum distance between the duct opening is 200 mm. This applies for distances between the duct holding the damper and a nearby foreign object crossing the fire-resistive wall.

| | | | | |
|---|---|---|---|---|
| ON | F-R60K<br>DN100 ... DN630 | EI 60 ($v_e$ - i ↔ o) S | d) 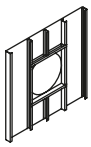 <br>≥ 80 mm |  <br>360° |

Notes:

**d)** - Shaft wall - one side covered with 2 layers of gypsum board

**$v_e$** - Vertical wall placement

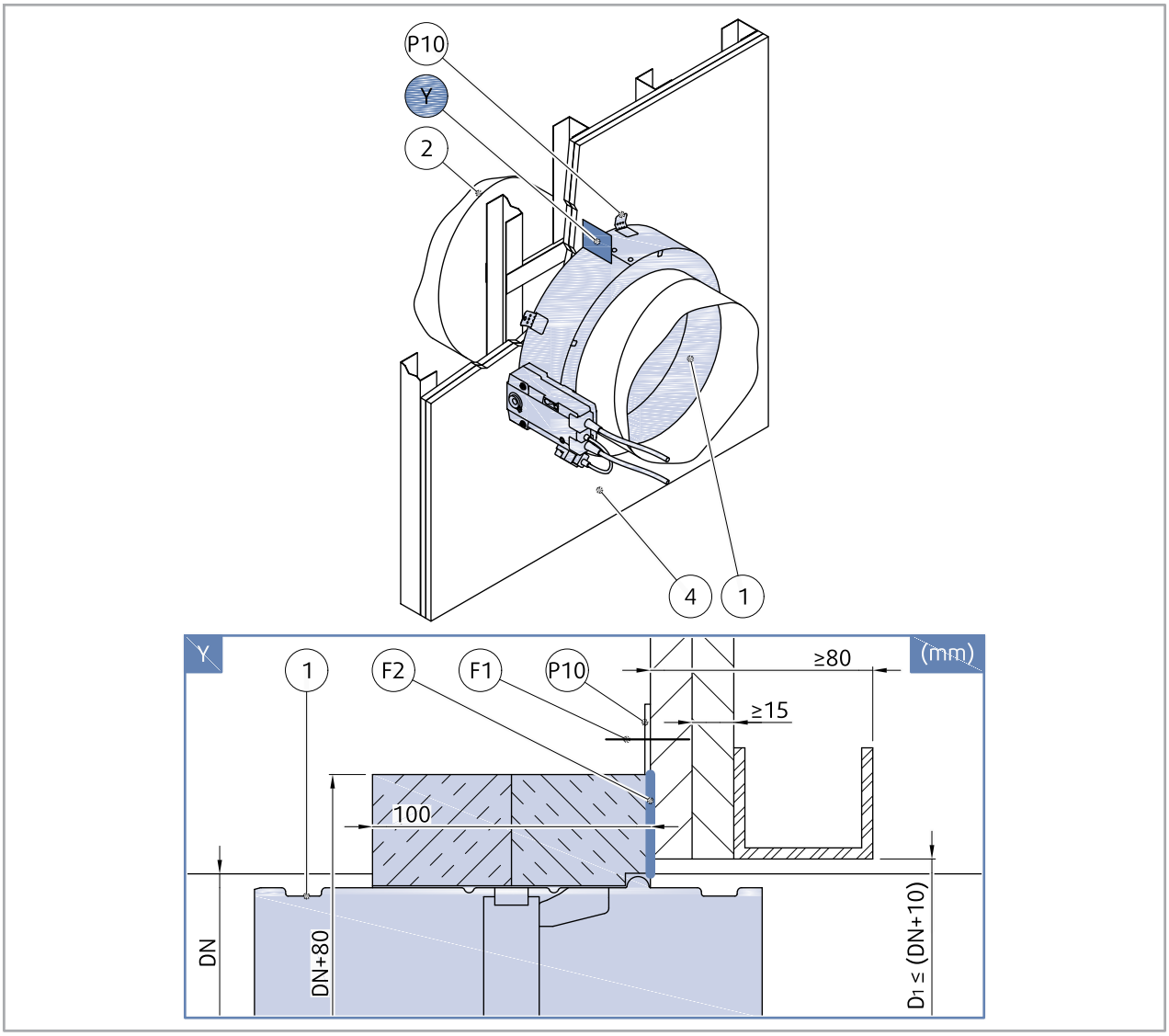
P10
Y
2
4
1
Y
1
F2
F1
P10
≥80
(mm)
≥15
100
DN
DN+80
D1 ≤ (DN+10)

## Opening and Wall and/or Ceiling Preparations

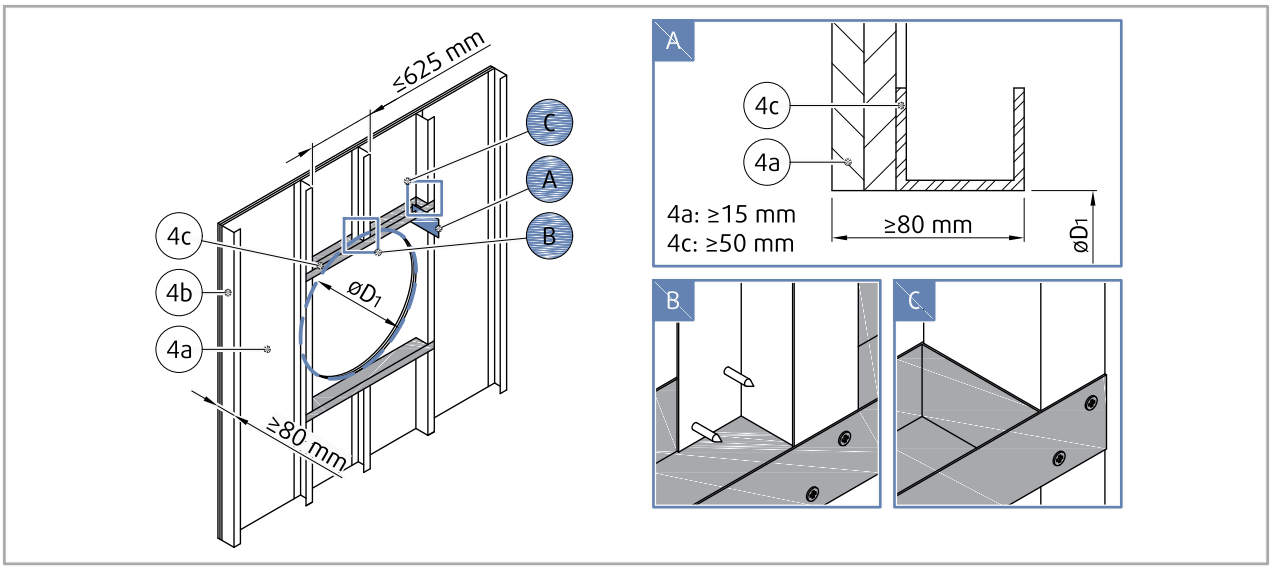


## Damper Minimum Distances

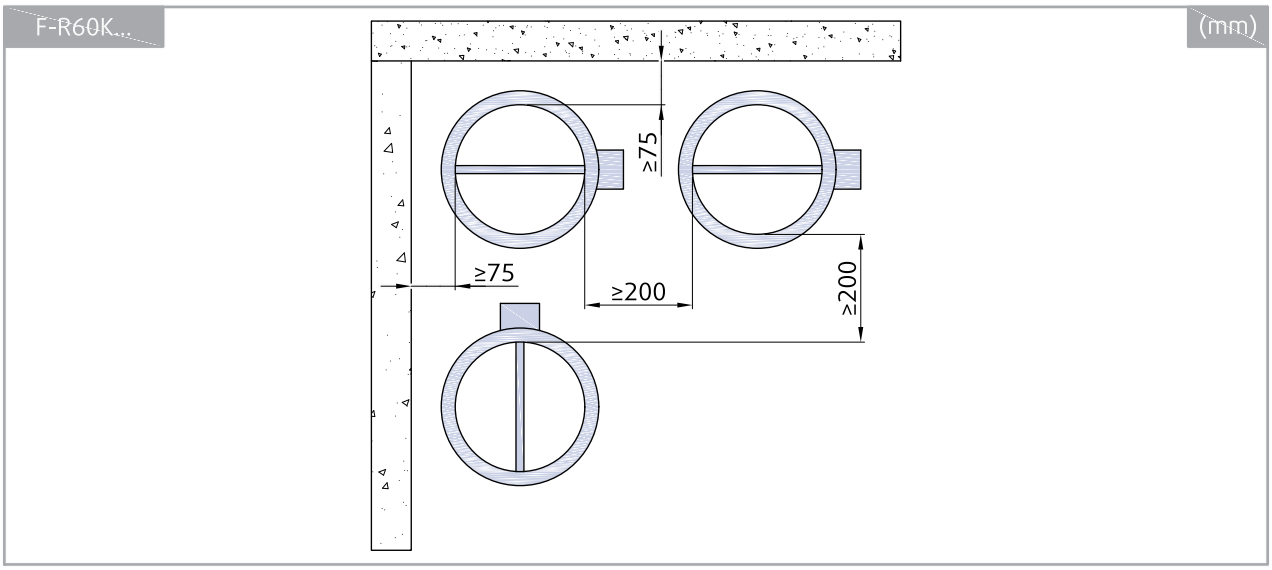


Legend for Installation ON a Shaft Wall

**1** - Fire damper (F-R60K)

**2** - Duct

**4** - Flexible (plasterboard) wall

**4a** - 2 layers of plasterboard fireproof plate type F, EN 520

**4b** - Vertical CW – profiles

**4c** - Horizontal CW – profiles

**P10** - Bendable hanger (part of the sheet metal ring cover)

**F1** - Screw d=4; e.g. DIN7981

**F2** - Fire resistive coating, Kleber K84/Promat or Grena-klebepaste/Grena

# Installation ON a Sandwich Wall

## Double Sided Panel with Insulated Core

**IMPORTANT: The insulation ring cannot be delivered separately! The insulation ring is delivered pre-mounted on a damper.**

1. The supporting construction opening must be prepared as depicted in wall preparation. Opening surfaces must be even and cleaned off.
2. The opening dimension D1 is driven by the nominal dimensions of the damper with added clearance. Build the sandwich panel wall according to manual of the manufacturer (5).
3. Prepare two cover boards of gypsum board type F with opening dimension D1 and minimum outer dimension of 80 mm around the damper insulation ring.
4. Seal the gaps between the cover boards, and between the cover board and the wall with suitable fire resistive caulk (F16).
5. Insert the duct into the opening with its end flush with the cover board on the side where the fire damper will be mounted.
6. From the wall's opposite side to the damper placement, hang the duct at 150 mm from the wall by two threaded rods (F7) through the suitable sheet metal ringlet (accessory) or UVH30 ringlet (A1). Additionaly, fix the duct to the wall by 8 pieces of sheet metal L-shape brackets (14).
7. Bend outwards hangers on the sheet metal covering ring.
8. Apply suitable fire resistive caulk (F16) to the fire damper insulation ring on the wall connection side.
9. Insert the damper into the duct and fix the insulation ring through bendable hangers and cover boards to the wall with screws (F15).
10. If needed, uncover and clean the damper after installation.
11. Check the damper's functionality

## Installation Distances

According to the standard EN 1366-2, the minimum distance from the wall or ceiling to the duct holding the fire damper is 75 mm. For multiple crossings through a fire resistive wall the minimum distance between the duct opening is 200 mm. This applies for distances between the duct holding the damper and a nearby foreign object crossing the fire-resistive wall.

| | | | | |
|---|---|---|---|---|
| ON | F-R60K<br>DN100 ... DN630 | EI 60 ($v_e$ - i ↔ o) S | e)<br>≥ 100 mm | 360° |

Notes:

**e)** - Sandwich wall - non-loadbearing wall, double sided steel horizontal panel, with mineral wool core

**$v_e$** - Vertical wall placement

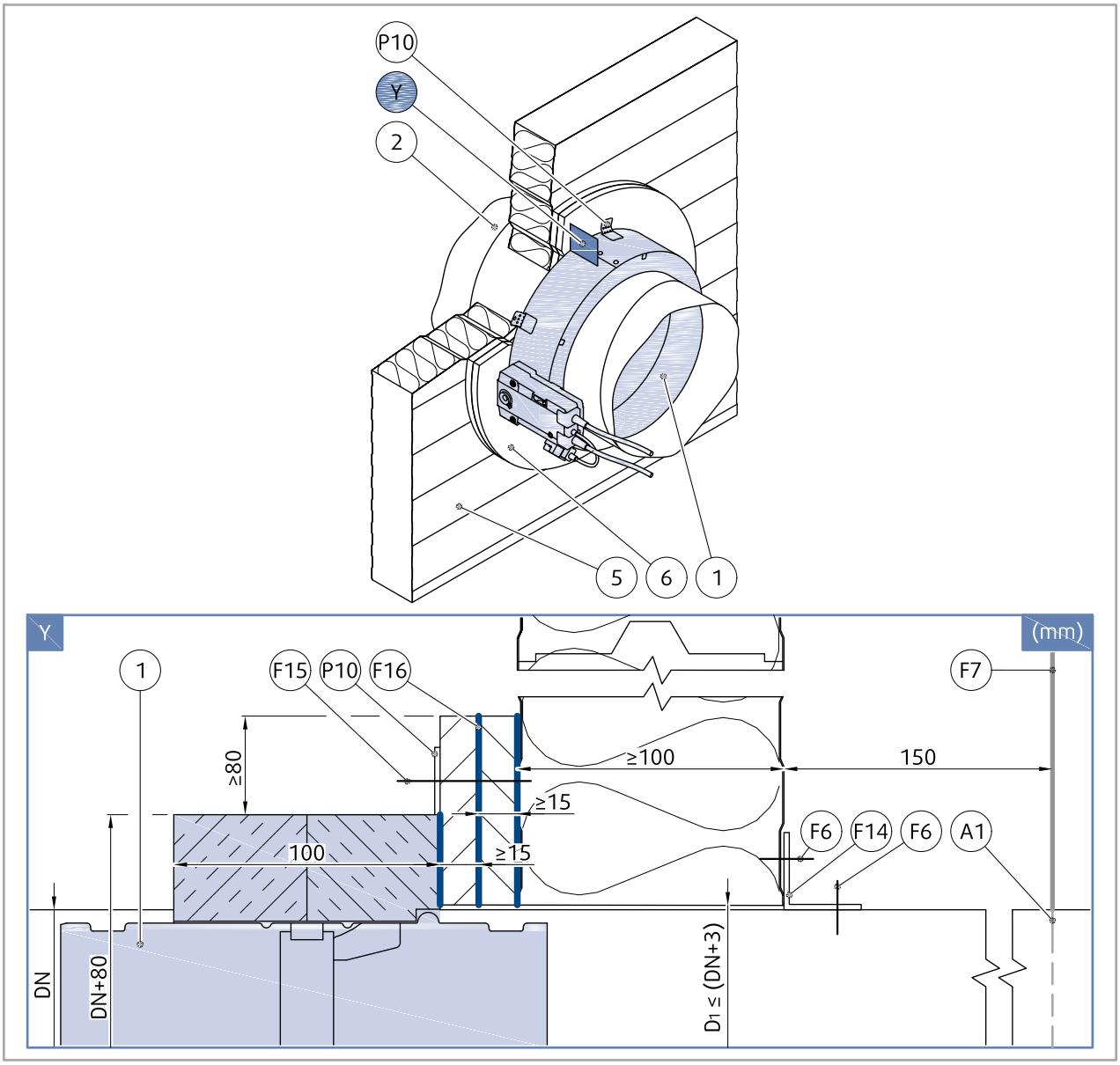
P10
Y
2
5
6
1
Y
(mm)
1
F15
P10
F16
F7
≥80
≥100
150
≥15
F6
F14
F6
A1
100
≥15
DN
DN+80
D1 ≤ (DN+3)

## Opening and Wall and/or Ceiling Preparations

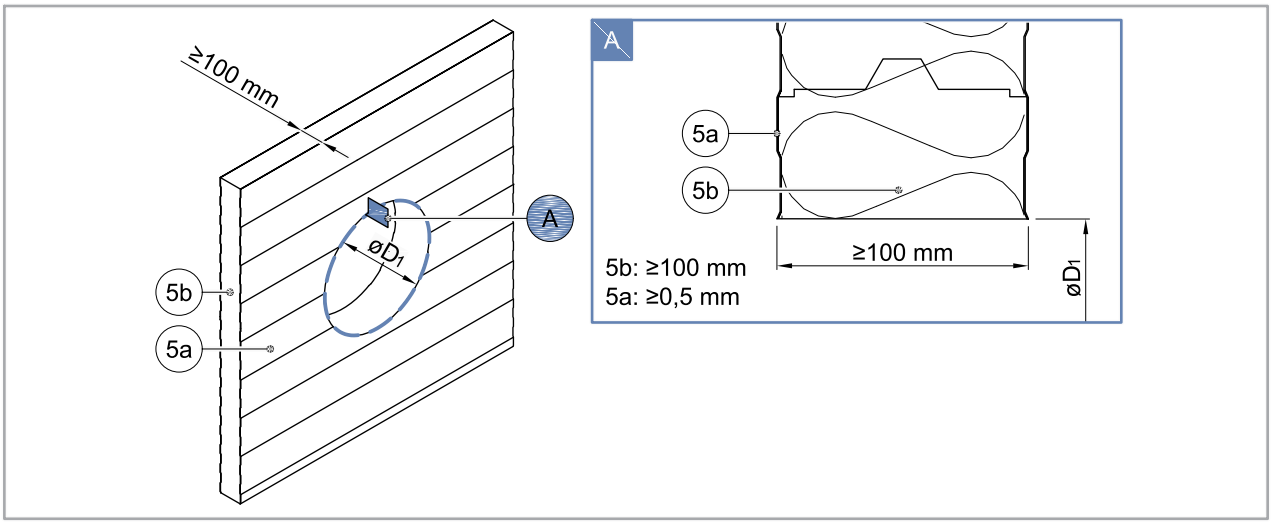


## Damper Minimum Distances

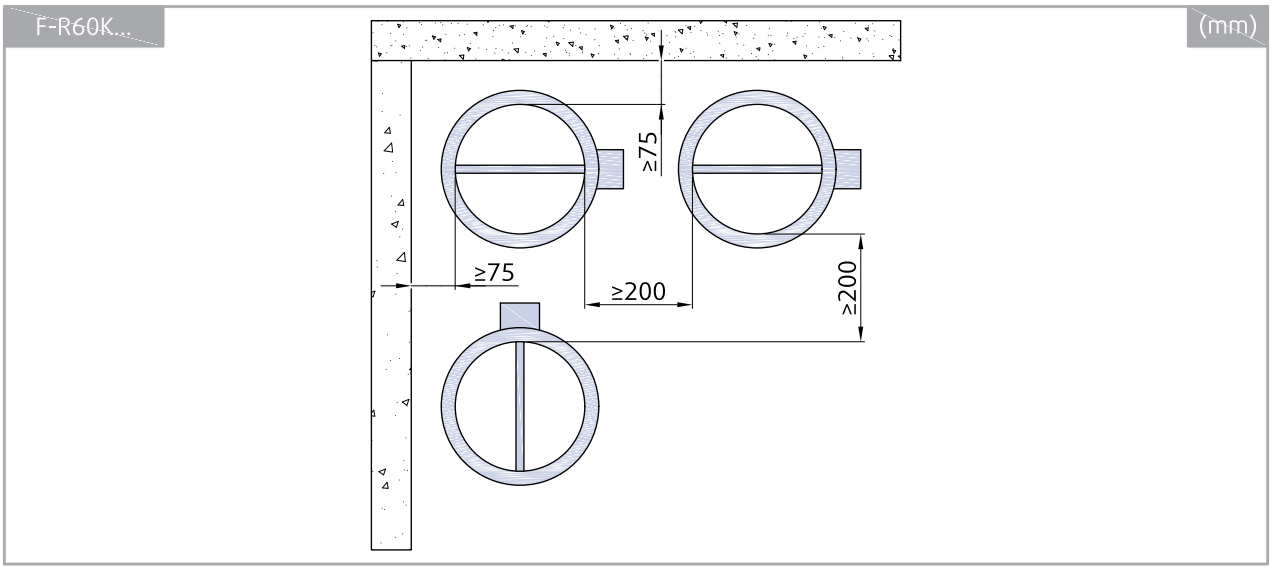


Legend for Installation ON a Sandwich wall

**1** - Fire damper (F-R60K)
**2** - Duct
**5** - Sandwich panels (Kingspan, type KS 1150 FR, horizontal placement)
**5a** - Side panels - (steel sheet)
**5b** - Core (mineral wool)
**6** - 2 layers of plasterboard fireproof plate type F, EN 520
**P10** - Bendable hanger (part of the sheet metal ring cover)
**A1** Ringlet UVH30 (Lindab) or Accessory: R1-F-R60K ringlet for Out installation
**F6** - Self taping screws d=4.2
**F7** - M10 Steel threaded rod + M10 nuts (2x on each rod)
**F14** - 8 pcs of steel sheet L-shape brackets (30x30x20x2 mm)
**F15** - Self taping screws d=4.2x50 mm
**F16** - Firestop acrylic sealant (Hilti CFS-S ACR)

# Installation ON a Ceiling

## Rigid Ceiling, Floor

**IMPORTANT: The insulation ring cannot be delivered separately! The insulation ring is delivered pre-mounted on a damper.**

1. The supporting construction opening must be prepared as depicted in wall preparation. Opening surfaces must be even and cleaned off.
2. The opening dimension D1 is driven by the nominal dimensions of the damper with added clearance.
3. Insert the duct into the opening with its end flush with the supporting construction on the side where the fire damper will be mounted.
4. Apply glue (F4) to segments of mineral wool (F3). Fill the opening with segments of mineral wool (F3) with density at least 100 kg/m^3 to create filling between duct and wall.
5. Bend outwards hangers on the metal sheet covering ring.
6. Apply a suitable fire resistive caulk (F2) to the fire damper insulation ring on the wall connection side.
7. Insert the damper into the duct and fix the insulation ring through bendable hangers to the wall with screws (F1) into the wall beams or with plugs for gypsum boards.
8. If needed, uncover and clean the damper after installation.
9. Check the damper's functionality

## Installation Distances

According to the standard EN 1366-2, the minimum distance from the wall or ceiling to the duct holding the fire damper is 75 mm. For multiple crossings through a fire resistive wall the minimum distance between the duct opening is 200 mm. This applies for distances between the duct holding the damper and a nearby foreign object crossing the fire-resistive wall.

## Installation - Smaller Distances

The distance between 2 individual fire dampers can be reduced to 80 mm, measured from surface to surface of the housing and the distance between the surface of the damper kit installed in the duct and the adjacent supporting construction (wall) can be reduced to 5 mm.

| | | | |
|---|---|---|---|
| ON | F-R60K<br>DN100 ... DN630 | EI 60 ($h_o$ - i ↔ o) S | c) 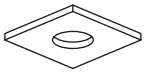 <br>≥ 100 mm<br>≥ 620 kg/m³ |

Notes:

**c)** - Concrete/cellular concrete (rigid) floor/ceiling

**d)** - Shaft wall - one side covered with 2 layers of gypsum board

**$h_o$** - Horizontal floor/ceiling placement

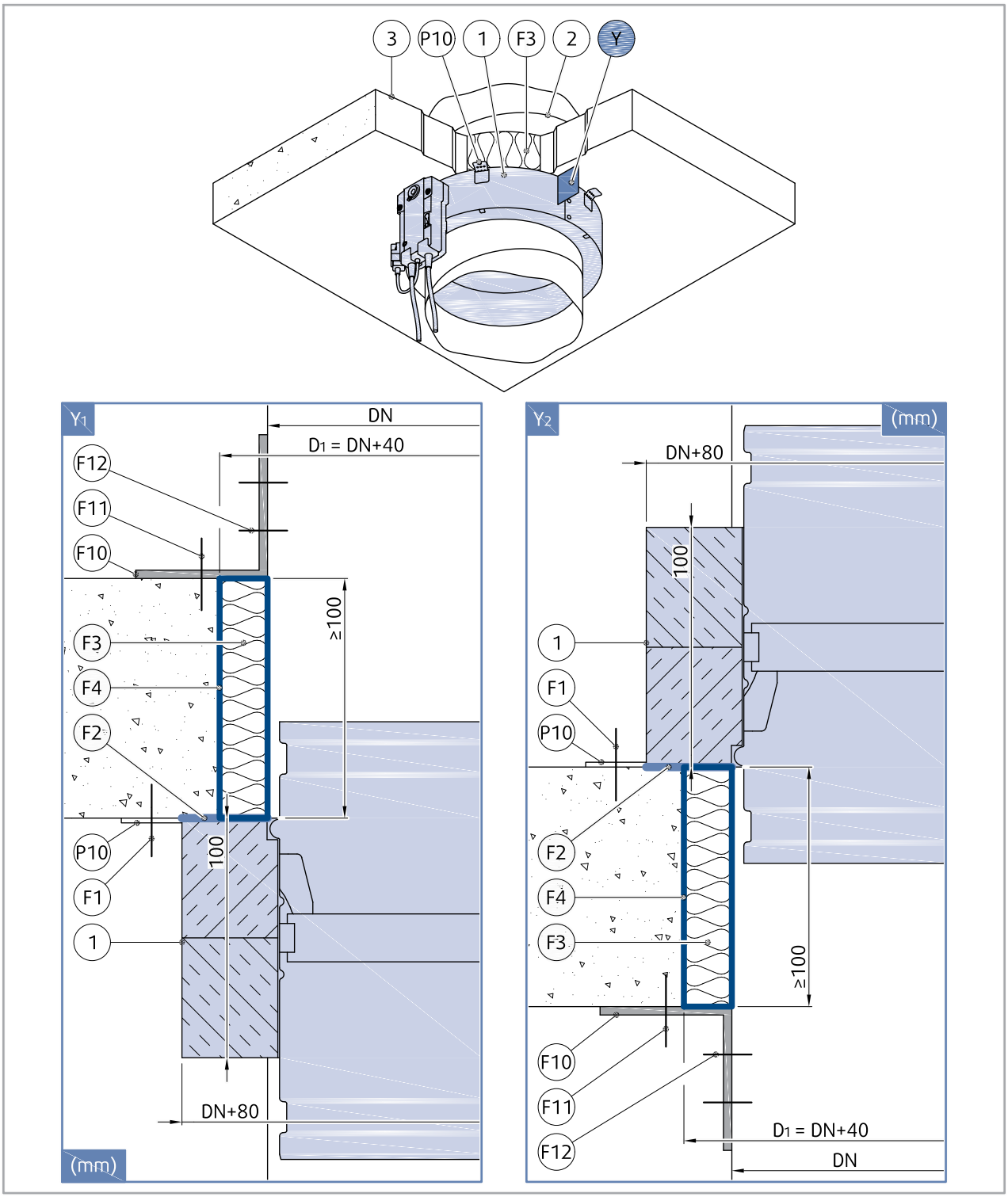
3
P10
1
F3
2
Y
Y1
DN
D1 = DN+40
F12
F11
F10
≥100
F3
F4
F2
P10
100
F1
1
DN+80
(mm)
Y2
(mm)
DN+80
100
1
F1
P10
F2
F4
F3
≥100
F10
F11
F12
D1 = DN+40
DN

## Opening and Wall and/or Ceiling Preparations

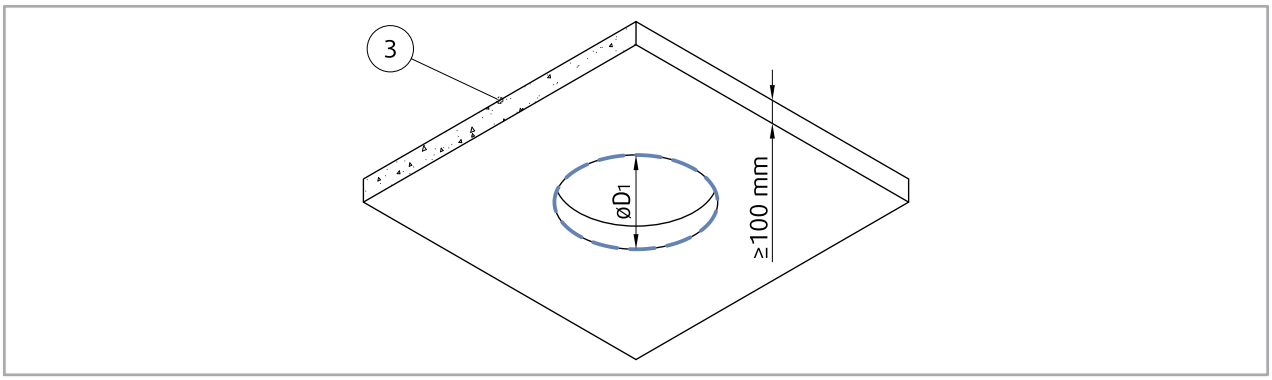


## Damper Minimum Distances

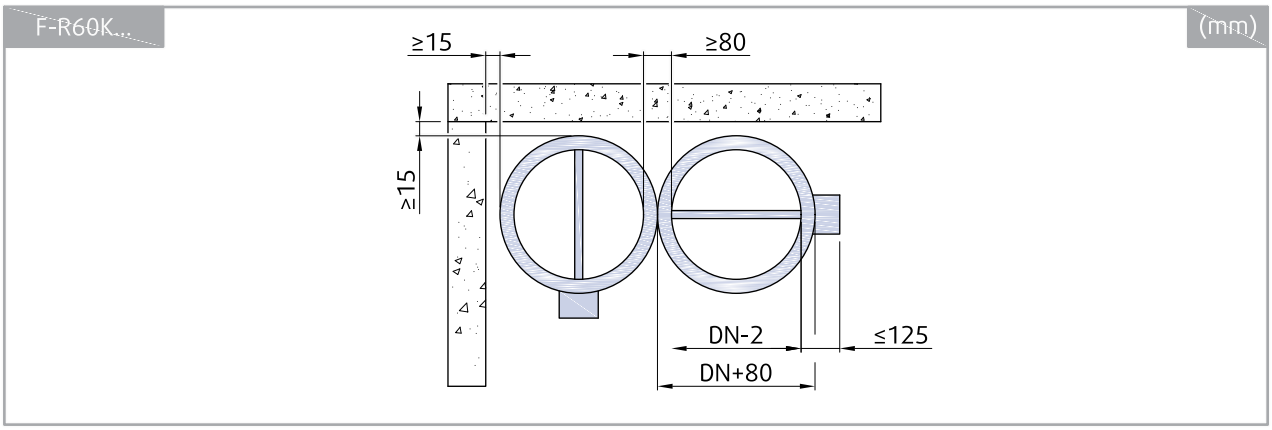


Legend for Installation ON a Ceiling

**1** - Fire damper (F-R60K)
**2** - Duct
**3** - Concrete/masonry/cellular concrete wall or ceiling
**P10** - Bendable hanger (part of the sheet metal ring cover)
**F1** - Screw d=4; e.g. DIN7981
**F2** - Fire resistive coating, Kleber K84/Promat or Grena-klebepaste/Grena
**F3** - Mineral wool filling (min. 100 kg/m^3)
**F4** - Fire resistive coating (Hilti CSF-CT)
**F10** - L shaped hanger, (Hilti MVA-LC; DN100 < 2x ≤ DN250; DN250 < 3x ≤ DN355; DN355 < 4x ≤ DN630)
**F11** - Screw M8 with suitable wall plug
**F12** - Self-drilling screw M4 × 13 mm

# Installation OUT of the Wall

## Standard Flexible & Rigid Wall

**IMPORTANT: The insulation ring cannot be delivered separately! The insulation ring is delivered pre-mounted on a damper.**

1. The supporting construction opening must be prepared as depicted in wall preparation. Opening surfaces must be even and cleaned off.
2. The opening dimension D1 is driven by the nominal dimensions of the damper with added clearance. The flexible wall opening must be reinforced as per the shaft plasterboard walls manufacturer instructions (usually only top and bottom horizontal metal beam).
3. Place the duct into the opening and onto the load bearing structure (hangers) in such a way that the duct will stick out of the wall to the needed distance.
4. Fix the duct to a suitable sheet metal ringlet accessory (A1) or UVH30/Lindab ringlet at the wall surface. Then fix the ringlet through L-profile (F5) to the supporting construction with screws (F1).
5. Insert the damper into the duct and fasten through the duct that crosses the wall with screws (F6). Make sure the fixing screws are not interfering with the blade movement.
6. Place two threaded rods (F7) through the suitable sheet metal ringlet (accessory) or UVH30 ringlet.
7. Hang the damper weight and connected duct directly after the damper insulating ring also with nuts (F7).
8. Paint the insulation surface in alignment with the wall with a suitable glue (F2) up to 100 mm from the duct to cover the insulation and part of the wall.
9. Insulate the duct parts between the damper and the wall with one layer of insulation (F8). For easier fixing, the duct insulation should overlap the dampers' insulation ring at least 20 mm.
10. Entwine the insulation. Secure the insulation with a binding wire (d=1,6 mm) in the standard way that is applied when insulating circular ducts or by using wire clamps to sew together the meshes on the top of the insulation (F8).
11. Compress the overlapping insulation while applying aluminium tape (F9) to fix the insulation to the damper ring. The actuator and thermal sensor must remain uninsulated and without tape for future maintenance.
12. If needed, uncover and clean the damper after installation.
13. Make sure the fixing screws are not interfering with the blade movement and check the damper's functionality.

## Installation Distances

For installation Out of the wall, the minimum distance from the wall or ceiling to the damper body is 100 mm. For multiple crossings through a fire resistive wall the minimum distance between the duct opening is 200 mm. This applies for distances between the duct holding the damper and a nearby foreign object crossing the fire-resistive wall.

| | | | | | |
|---|---|---|---|---|---|
| OUT | F-R60K<br>DN100 ... DN630 | EI 60 ($v_e$ - i ↔ o) S | a) 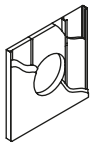 <br>≥ 100 mm | b) 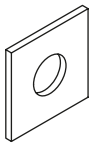 <br>≥ 100 mm |  <br>360° |

Notes:

**a)** - Flexible (plasterboard) wall

**b)** - Concrete/masonry/cellular concrete (rigid) wall

**$v_e$** - Vertical wall placement

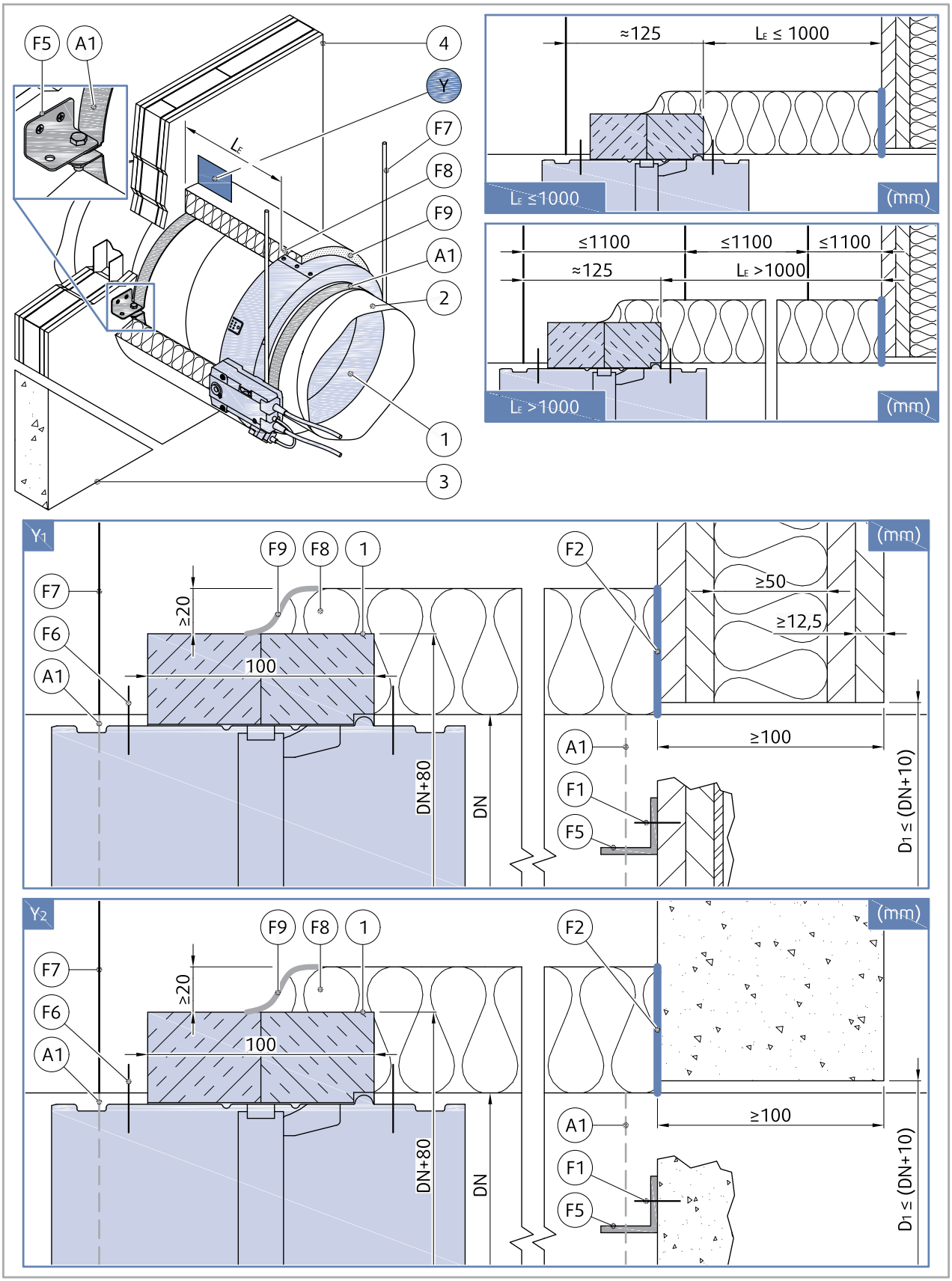
F5
A1
4
Y
F7
F8
F9
A1
2
1
3
LE
≈125
LE ≤ 1000
LE ≤1000
(mm)
≤1100
≤1100
≤1100
≈125
LE >1000
LE >1000
(mm)
Y1
(mm)
F9
F8
1
F2
F7
F6
A1
≥20
100
≥50
≥12,5
≥100
DN+80
DN
A1
F1
F5
D1 ≤ (DN+10)
Y2
(mm)
F9
F8
1
F2
F7
F6
A1
≥20
100
≥100
DN+80
DN
A1
F1
F5
D1 ≤ (DN+10)

## Opening and Wall and/or Ceiling Preparations

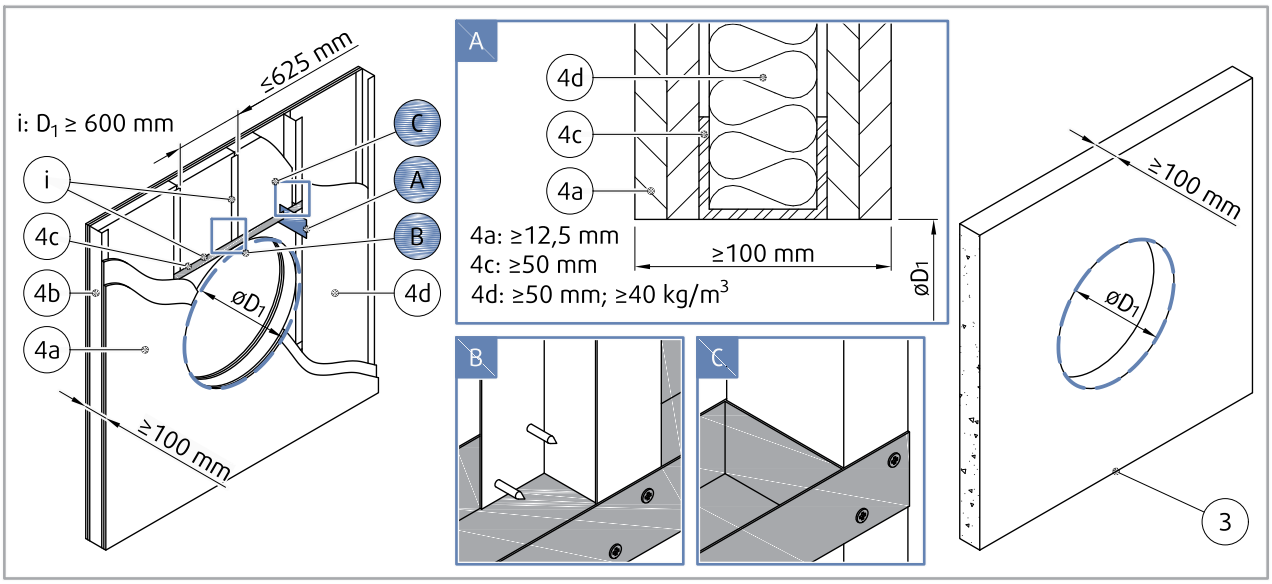


## Damper Minimum Distances

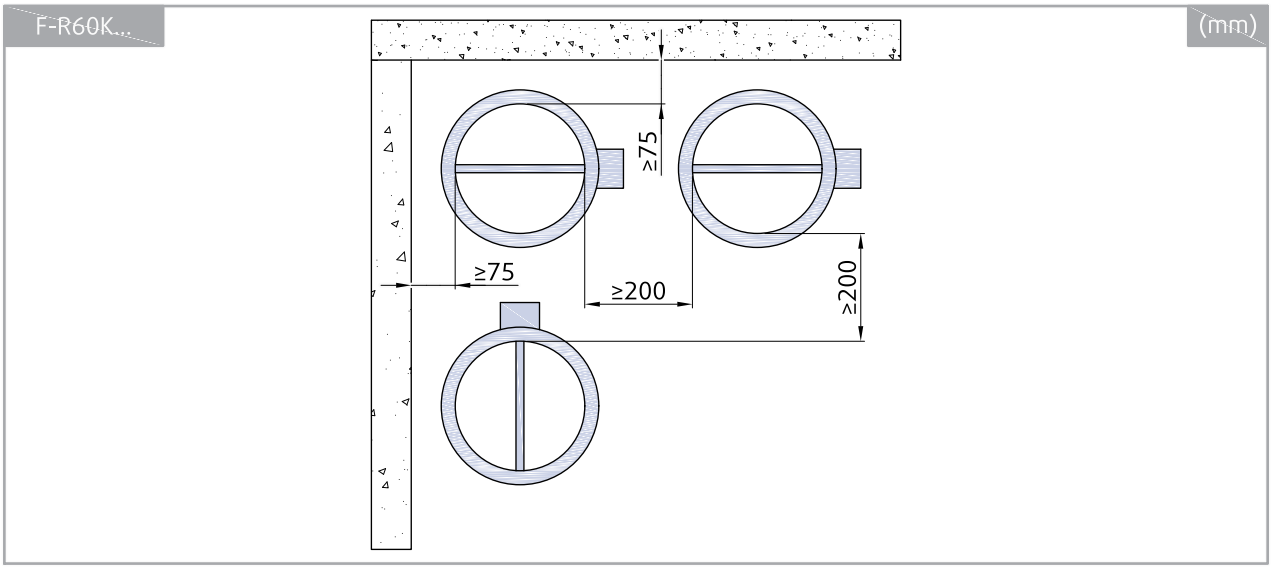

Legend for Installation OUT of the Standard Wall

**1** - Fire damper (F-R60K)

**2** - Duct

**3** - Concrete/masonry/cellular concrete wall or ceiling.

**4** - Flexible (plasterboard) wall

**4a** - 2 layers of plasterboard fireproof plate type F, EN 520

**4b** - Vertical CW – profiles

**4c** - Horizontal UW – profiles

**4d** - Mineral wool; thickness/cubic density see picture

**P10** - Bendable hanger (part of the sheet metal ring cover)

**A1** - Ringlet UVH30 (Lindab) or Accessory: R1-F-R60K ringlet for Out installation.

**F1** - Screw d=4; e.g. DIN7981

**F2** - Fire resistive coating, Kleber K84/Promat or Grena-klebepaste/Grena

**F5** - L-profile 25x25x3 or part of accessory R1-F-R60K ringlet

**F6** - Self taping screws d=4.2

**F7** - M10 Steel threaded rod + M10 nuts (2x on each rod)

**F8** - Stone wool PAROC Pro Wired Mat 80 AL1 (PAROC), thickness 70 mm, nominal density 80 kg/m^3; Binding wires or wire clamps.

**F9** - Aluminium tape

# Installation OUT of the Shaft Wall

## One Side Gypsum Covered Wall - 2 Layers

**IMPORTANT: The insulation ring cannot be delivered separately! The insulation ring is delivered pre-mounted on a damper.**

1. The supporting construction opening must be prepared as depicted in wall preparation. Opening surfaces must be even and cleaned off.
2. The opening dimension D1 is driven by the nominal dimensions of the damper with added clearance. The flexible wall opening must be reinforced as per the shaft plasterboard walls manufacturer instructions (usually only top and bottom horizontal metal beam).
3. Place the duct into the opening and onto the load bearing structure (hangers) in such a way that the duct will stick out of the wall to the needed distance.
4. Fix the duct to a suitable sheet metal ringlet accessory (A1) or UVH30/Lindab ringlet at the wall surface. Then fix the ringlet through L-profile (F5) to the supporting construction with screws (F1).
5. Insert the damper into the duct and fasten through the duct that crosses the wall with screws (F6). Make sure the fixing screws are not interfering with the blade movement.
6. Place two threaded rods (F7) through the suitable sheet metal ringlet (accessory) or UVH30 ringlet.
7. Hang the damper weight and connected duct directly after the damper insulating ring also with nuts (F7).
8. Paint the insulation surface in alignment with the wall with a suitable glue (F2) up to 100 mm from the duct to cover the insulation and part of the wall.
9. Insulate the duct parts between the damper and the wall with one layer of insulation (F8). For easier fixing, the duct insulation should overlap the dampers' insulation ring at least 20 mm.
10. Entwine the insulation. Secure the insulation with a binding wire (d=1,6 mm) in the standard way that is applied when insulating circular ducts or by using wire clamps to sew together the meshes on the top of the insulation (F8).
11. Compress the overlapping insulation while applying aluminium tape (F9) to fix the insulation to the damper ring. The actuator and thermal sensor must remain uninsulated and without tape for future maintenance.
12. If needed, uncover and clean the damper after installation.
13. Make sure the fixing screws are not interfering with the blade movement and check the damper's functionality.

## Installation Distances

For installation Out of the wall, the minimum distance from the wall or ceiling to the damper body is 100 mm. For multiple crossings through a fire resistive wall the minimum distance between the duct opening is 200 mm. This applies for distances between the duct holding the damper and a nearby foreign object crossing the fire-resistive wall.

| | | | | |
|---|---|---|---|---|
| OUT | F-R60K<br>DN100 ... DN630 | EI 60 ($v_e$ - i ↔ o) S | d) 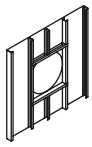 <br>≥ 80 mm | 360° |

Notes:

**d)** - Shaft wall - one side covered with 2 layers of gypsum board

**$v_e$** - Vertical wall placement

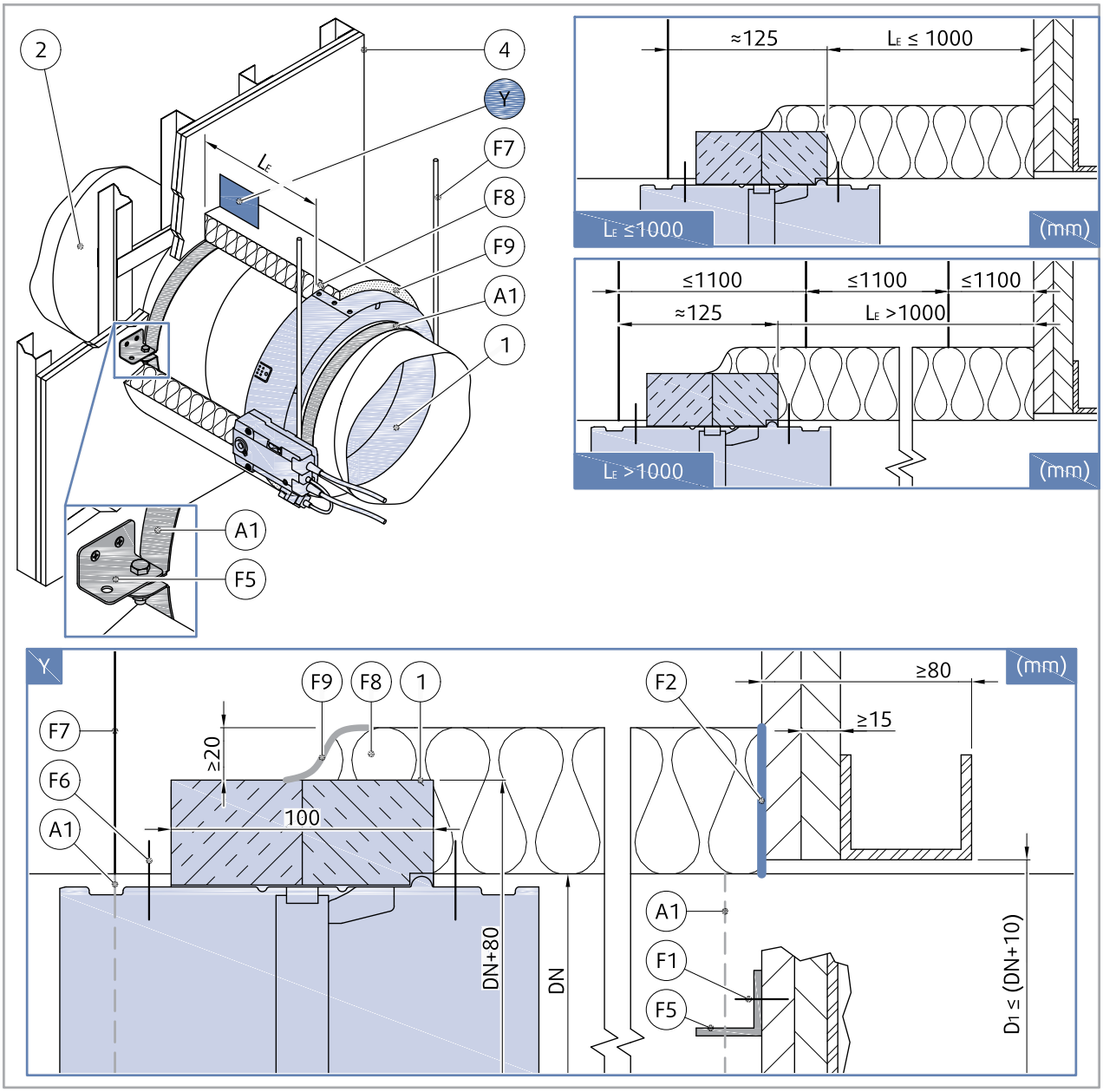
2
4
Y
F7
F8
F9
A1
1
A1
F5
LE
≈125
LE ≤ 1000
LE ≤1000
(mm)
≤1100
≤1100
≤1100
≈125
LE >1000
LE >1000
(mm)
Y
(mm)
F9
F8
1
F7
F6
A1
≥20
100
DN+80
DN
F2
≥80
≥15
A1
F1
F5
DT ≤ (DN+10)

## Opening and Wall and/or Ceiling Preparations

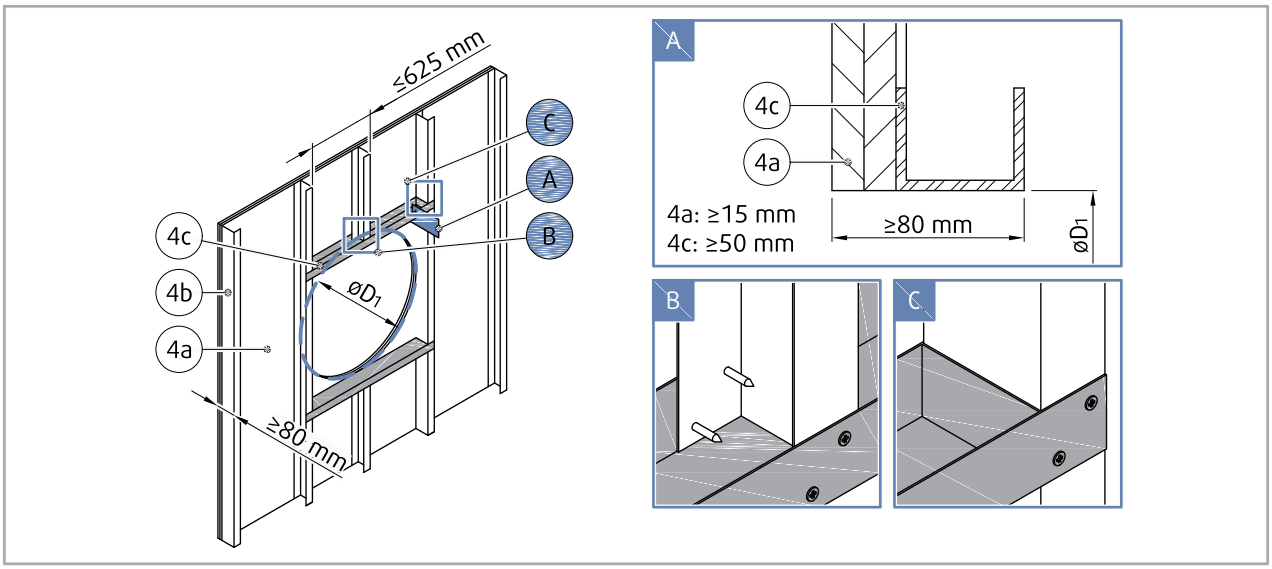


## Damper Minimum Distances

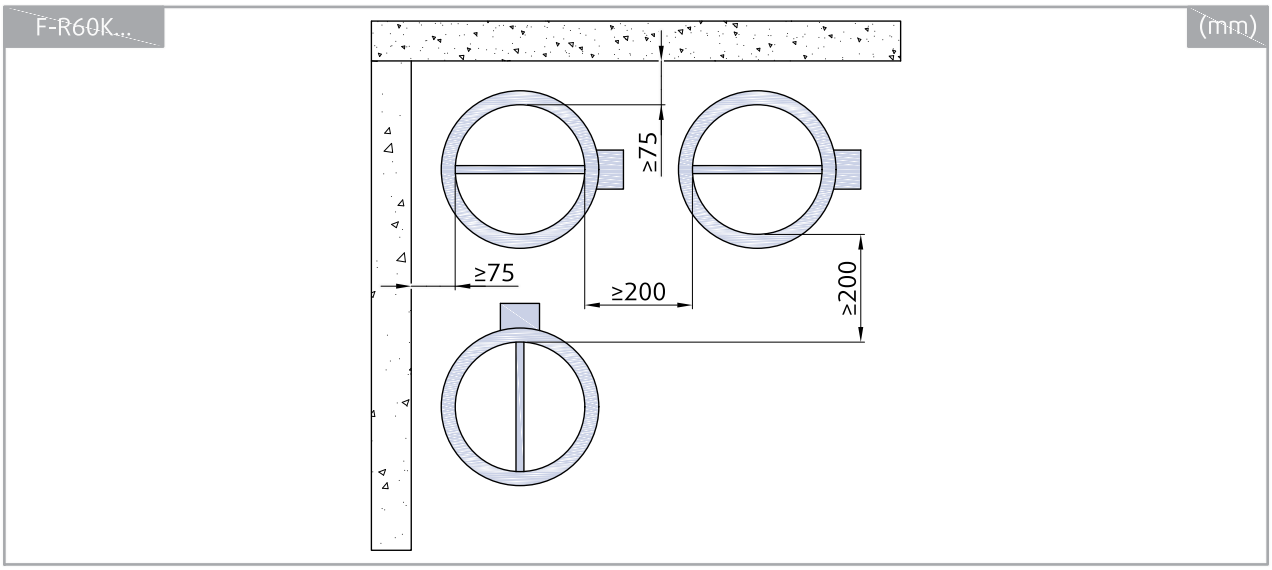

Legend for Installation OUT of the Shaft Wall

**1** - Fire damper (F-R60K)

**2** - Duct

**A1** - Ringlet UVH30 (Lindab) or Accessory: R1-F-R60K ringlet for Out installation.

**4** - Flexible (plasterboard) wall

**4a** - 2 layers of plasterboard fireproof plate type F, EN 520

**4b** - Vertical CW – profiles

**4c** - Horizontal UW – profiles

**P10** - Bendable hanger (part of the sheet metal ring cover)

**F1** - Screw d=4; e.g. DIN7981

**F2** - Fire resistive coating, Kleber K84/Promat or Grena-klebepaste/Grena

**F5** - L-profile 25x25x3 or part of accessory R1-F-R60K ringlet

**F6** - Self taping screws d=4.2

**F7** - M10 Steel threaded rod + M10 nuts (2x on each rod)

**F8** - Stone wool PAROC Pro Wired Mat 80 AL1 (PAROC), thickness 70 mm, nominal density 80 kg/m^3; Binding wires or wire clamps.

**F9** - Aluminium tape

# Installation OUT of the Ceiling

## Rigid Ceiling, Floor

1. The supporting construction opening must be prepared as depicted in ceiling preparation. Opening surfaces must be even and cleaned off.
2. The opening dimension D1 is driven by the nominal dimensions of the damper with added clearance.

Note: When the duct is covered with concrete, no added clearance is needed.

3. Place the duct into the opening and onto the load bearing structure (hangers) in such a way that the duct will stick out of the ceiling to the needed distance.
4. Fix the duct to a suitable sheet metal ringlet accessory (A1) or UVH30/Lindab ringlet with screws (F6). Then fix the ringlet through L-profile (F5) to the supporting construction with screws (F1).
5. Place two supporting system hangers (F13).

Note: Supporting hangers can be replaced by other hangers of the same or higher strength.

6. Insert the damper into the duct and fasten through the duct that crosses the ceiling with screws (F6). Make sure the fixing screws are not interfering with the blade movement.
7. Place the ringlet on the connecting duct and connect the duct to the damper.
8. Fix the damper with the duct and the ringlet using screws (F6). Make sure the fixing screws are not interfering with the blade movement.
9. Paint the insulation surface in alignment with the ceiling with a suitable glue (F2) up to 100 mm from the duct to cover the insulation and part of the ceiling.
10. Insulate the duct parts between the damper and the ceiling with one layer of insulation (F8). For easier fixing, the duct insulation should overlap the damper's insulation ring at least 20 mm.
11. Paint the damper body with a suitable glue (F2) at the contact with the end of the insulation.
12. Entwine the insulation. Secure the insulation with a binding wire (d=1,6 mm) in the standard way that is applied when insulating circular ducts or by using wire clamps to sew together the meshes on the top of the insulation (F8).
13. Compress the overlapping insulation while applying aluminium tape (F9) to fix the insulation to the damper's insulation ring. The actuator and thermal sensor must remain uninsulated and without tape for future maintenance.
14. If needed, uncover and clean the damper after installation.
15. Make sure the fixing screws are not interfering with the blade movement and check the damper's functionality.

## Installation Distances

For installation Out of the ceiling, the minimum distance from the wall to the damper body is 100 mm. For multiple crossings through a fire resistive ceiling the minimum distance between the duct opening is 200 mm. This applies for distances between the duct holding the damper and a nearby foreign object crossing the fire-resistive ceiling.

| | | | | |
|---|---|---|---|---|
|  OUT | F-R60K<br>DN100 ... DN630 | EI 60 ($h_o$ - i ↔ o) S | c) 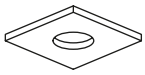 <br>≥ 100 mm<br>≥ 620 kg/m³ |  <br>360° |

Notes:

**c)** - Concrete/cellular concrete (rigid) floor/ceiling

**$h_o$** - Horizontal floor/ceiling placement

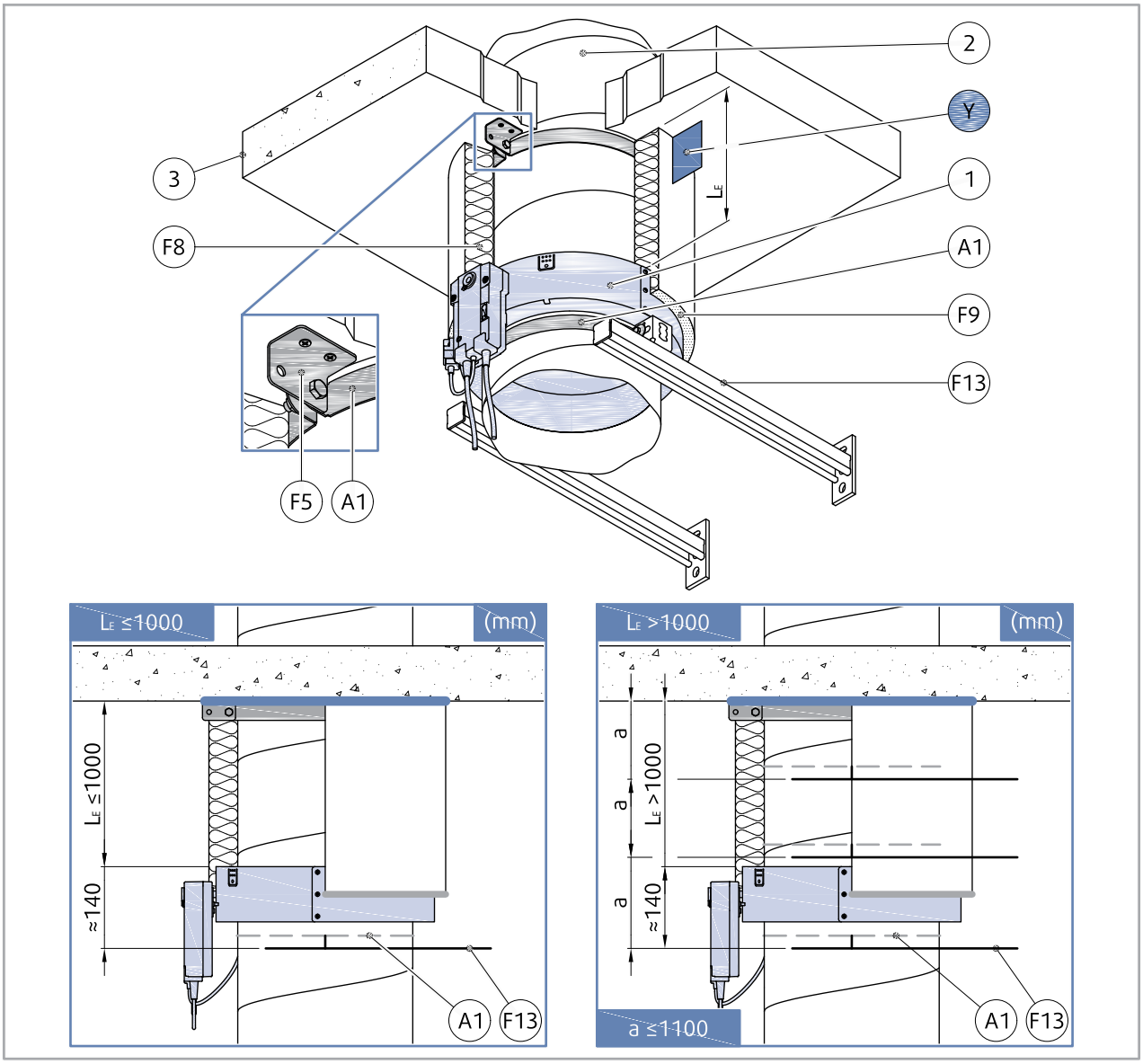
2
Y
3
1
F8
A1
F9
F13
F5
A1
LE
LE ≤1000
(mm)
LE ≤1000
≈140
A1
F13
LE >1000
(mm)
a
a
a
LE >1000
≈140
a ≤1100
A1
F13

## Opening and Wall and/or Ceiling Preparations

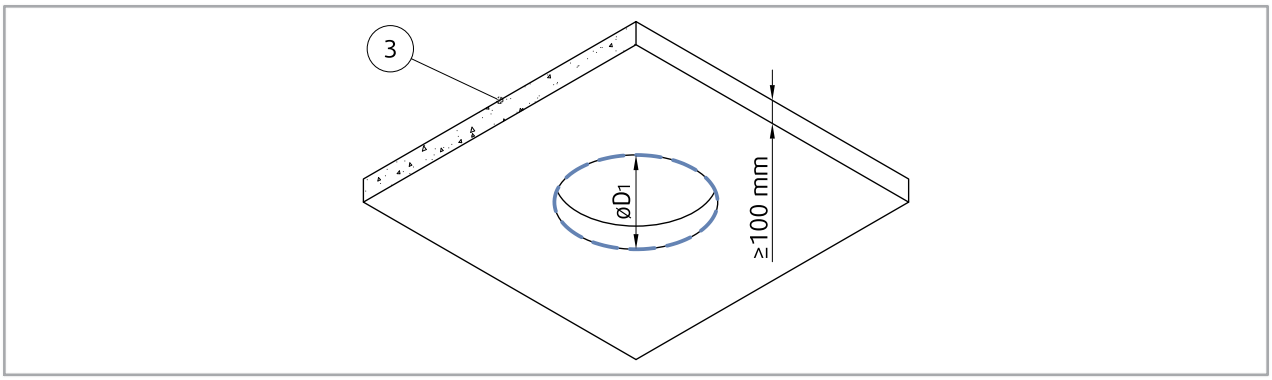


## Damper Minimum Distances

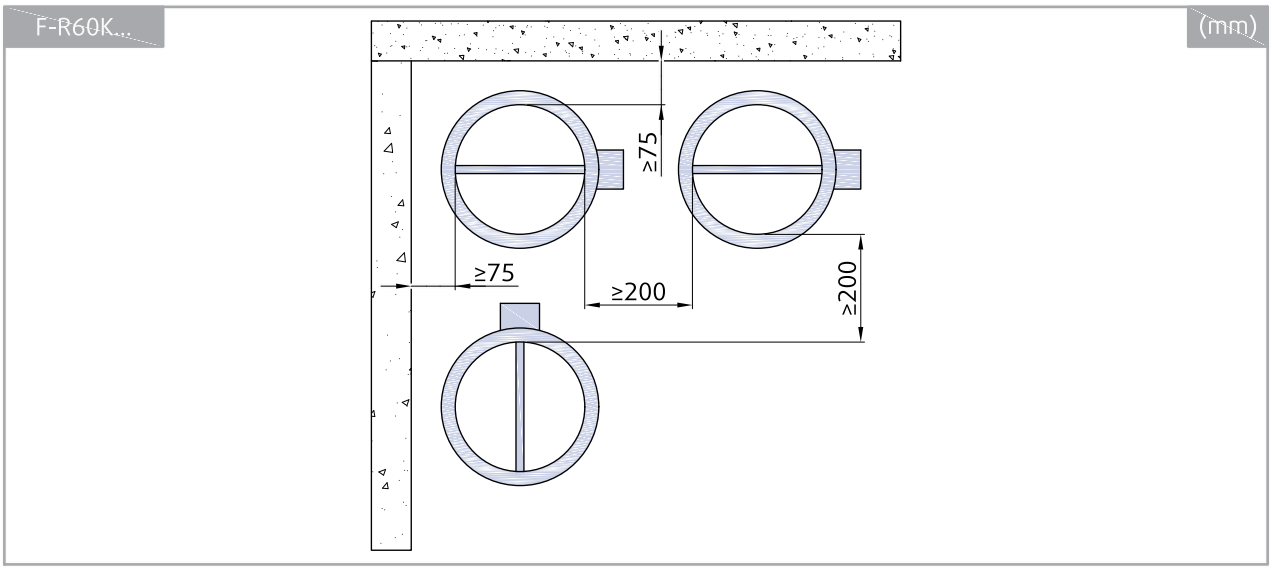


Legend for Installation OUT of the Ceiling

**1** - Fire damper (F-R60K)

**2** - Duct

**3** - Concrete/masonry/cellular concrete wall or ceiling

**A1** - Ringlet UVH30 (Lindab) or Accessory: R1-F-R60K ringlet for Out installation

**F1** - Screw d=4; e.g. DIN7981

**F2** - Fire resistive glue ISOVER Protect BSK

**F5** - L-profile 30x30x3 or part of accessory R1-F-R60K ringlet

**F6** - Self taping screws d=4.2

**F8** - Stone wool PAROC Pro Wired Mat 80 AL1 (PAROC), thickness 70 mm, nominal density 80 kg/m^3; Binding wires or wire clamps.

**F9** - Aluminium tape

**F13** - Support system (e.g. Hilti)

# Electrical Connections

IMPORTANT

- Danger of electric shock!
- Switch off the power supply before working on any electrical equipment.
- Only qualified electricians are allowed to work on the electrical system.

## Actuator Size Map

| A | DN (mm) | | | | | | | | | | | | | | | | |
|---|---|---|---|---|---|---|---|---|---|---|---|---|---|---|---|---|---|
| | 100 | 125 | 140 | 150 | 160 | 180 | 200 | 225 | 250 | 280 | 315 | 355 | 400 | 450 | 500 | 560 | 630 |
| | Belimo BFL...-T-... | | | | | | | | | | Belimo BFN...-T-... | | | | | | |
| | Gruner 340TA-...-05 | | | | | | | | | | | | | | | Gruner 360TA-...-12 | |

## Electrical Parameters per Activation and Actuator Type

| AT | A | T (Nm) | NV (V) | F (Hz) | CO (W) | CR (W) | WS (VA) | WN |
|---|---|---|---|---|---|---|---|---|
| H0, H2 | - | - | DC 12/24<br>AC 150/250 | 50/60 | - | - | - | 3 A |
| B230T | BFL230-T | 4 | AC 230 | | 3,5 | 1,1 | 6,5 | Imax 4 A @ 5 ms |
| | BFN230-T | 9 | AC 230 | | 9 | 2,1 | 10 | Imax 4 A @ 5 ms |
| G230T | 340TA-230-...-05-... | 5 | AC 230 | | 5,5 | 2 | 9,5 | Imax 5.2 A @ 5 ms |
| | 360TA-230-...-12-... | 12 | AC 230 | | 5,5 | 1,5 | 11,5 | Imax 5.2 A @ 5 ms |
| GST0 | 340TA-24-...-05-.../ST01<br>& FSC-UFC24-2 | 5 | AC/DC 24 | | 8,5 | 4 | 11 | Imax 5.6 A @ 5 ms |
| | 360TA-24...-12-.../ST01<br>& FSC-UFC24-2 | 12 | AC/DC 24 | | 7 | 4 | 9 | Imax 5.6 A @ 5 ms |
| B24T,<br>B24T-W | BFL24-T, BFL24-T-ST | 4 | AC/DC 24 | | 2,5 | 0,8 | 4 | Imax 8,3 A @ 5 ms |
| | BFN24-T, BFN24-T-ST | 9 | AC/DC 24 | | 4 | 1,4 | 6 | Imax 8,3 A @ 5 ms |
| G24T,<br>G24T-W | 340TA-24-...-05-...<br>340TA-24-...-05-.../ST01 | 5 | AC/DC 24 | | 6,5 | 2 | 9 | Imax 5.6 A @ 5 ms |
| | 360TA-24-...-12-...<br>360TA-24-...-12-.../ST01 | 12 | AC/DC 24 | | 5 | 2 | 7 | Imax 5.6 A @ 5 ms |
| B24T-SR | BFL24-SR-T | 4 | AC/DC 24 | | 3 | 1 | 6,5 | Imax 8,3 A @ 5 ms |
| | BFN24-SR-T | 9 | AC/DC 24 | | 4,5 | 1,7 | 8,5 | Imax 8,3 A @ 5 ms |
| G24T-SR | 340CTA-24-...-05-... | 5 | AC/DC 24 | | 6,5 | 2 | 7,5 | DC (0)2 V ...10 V<br>/ Ri > (100 kΩ)<br>50 kΩ (0)4 ... 20 mA |
| | 360CTA-24-...-12-... | 12 | AC/DC 24 | | 5 | 2 | 7 | |

### Notes

**AT** - Activation type

**A** - Belimo Actuator type

**T** - Torque

**NV** - Nominal Voltage

**F** - Frequency
**CO** - Consumption in Operation
**CR** - Consumption in Rest
**WS** - Wire sizing consumption
**WS** - Wire sizing consumption Note

## Type of Activation H0

This type of activation mechanism does not have any electrical equipment.

## Type of Activation H2

**IMPORTANT: Risk of electric shock!**

Microswitch:

Power Supply: 125/250V AC or 12/24V DCElectric Parameters: 3A

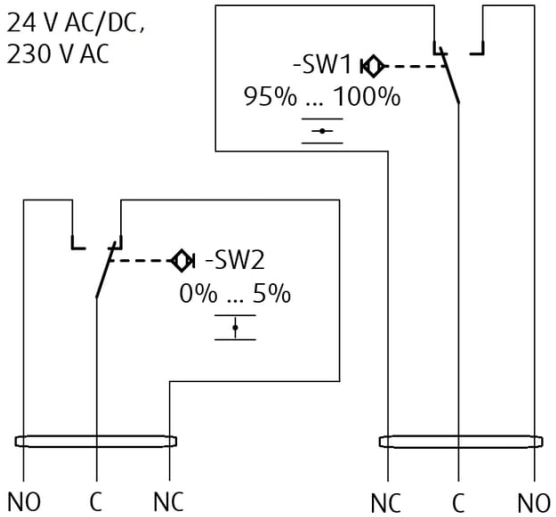


Notes:

- Switch off the power supply before working on any electrical equipment.
- Only qualified electricians are permitted to work on the electrical system.
- Power consumption must be observed!

### Legend

**NO** Blue cable colour

**C** Black cable colour

**NC** Grey cable colour

## Type of Activation B230T

IMPORTANT: Risk of electric shock!
Switch off the power supply before working on any electrical equipment.
Only qualified electricians are allowed to work on the electrical system.
Actuator power supply: 230V AC, 50/60 Hz

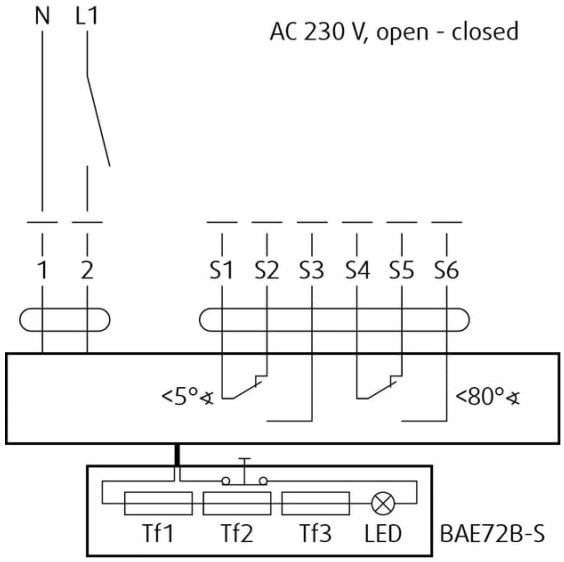


Notes:

- A device that disconnects the pole conductors (minimum contact gap 3 mm) is required for isolation from the power supply.
- Parallel connection of several actuators possible.
- Power consumption must be observed!

## Legend

**1** - Blue cable colour
**2** - Brown cable colour
**S1** - Violet cable colour
**S2** - Red cable colour
**S3** - White cable colour
**S4** - Orange cable colour
**S5** - Pink cable colour
**S6** - Grey cable colour
**Tf** - Thermal fuse

## Type of Activation G230T

IMPORTANT: Risk of electric shock!
Switch off the power supply before working on any electrical equipment.
Only qualified electricians are allowed to work on the electrical system.
Actuator power supply: 230V AC, 50/60 Hz

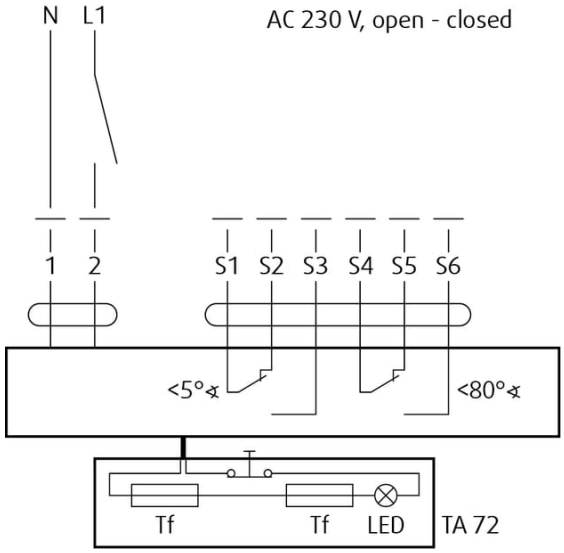


Notes:

- A device that disconnects the pole conductors (minimum contact gap 3 mm) is required for isolation from the power supply.
- Parallel connection of several actuators possible.
- Power consumption must be observed!

## Legend

**1** - Blue cable colour
**2** - Brown cable colour
**S1** - Violet cable colour
**S2** - Red cable colour
**S3** - White cable colour
**S4** - Orange cable colour
**S5** - Pink cable colour
**S6** - Grey cable colour
**Tf** - Thermal fuse

## Type of Activation B24T

IMPORTANT: Risk of electric shock!
Switch off the power supply before working on any electrical equipment.
Only qualified electricians are allowed to work on the electrical system.
Actuator power supply: AC (50/60 Hz)/DC 24 V

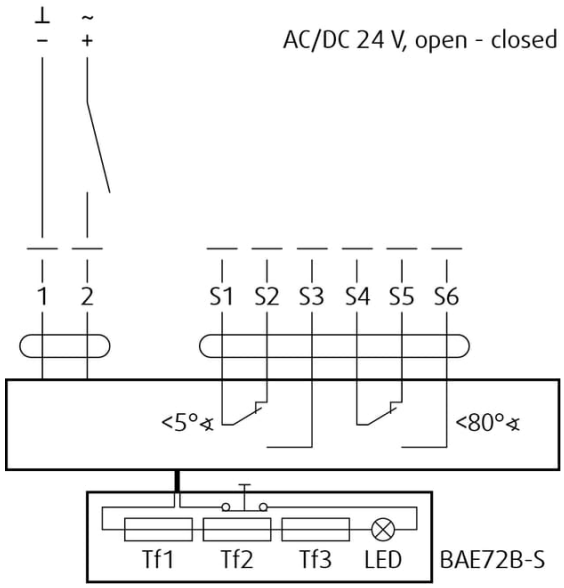


### Legend

**1** - Blue cable colour (black for BF24-T)
**2** - Red cable colour (white for BF24-T)
**S1** - Violet cable colour (white for BF24-T)
**S2** - Red cable colour (white for BF24-T)
**S3** - White cable colour (white for BF24-T)
**S4** - Orange cable colour (white for BF24-T)
**S5** - Pink cable colour (white for BF24-T)
**S6** - Grey cable colour (white for BF24-T)
**Tf** - Thermal fuse

## Type of Activation G24T

IMPORTANT: Risk of electric shock!
Switch off the power supply before working on any electrical equipment.
Only qualified electricians are allowed to work on the electrical system.
Actuator power supply: AC (50/60 Hz)/DC 24 V

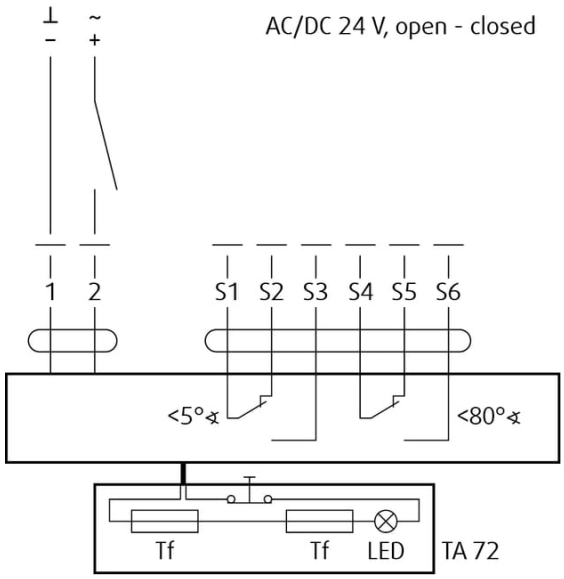


Notes:

- Supply via safety isolation transformer.
- Parallel connection of several actuators possible.
- Power consumption must be observed!

## Legend

**1** - Black cable colour
**2** - Red cable colour
**S1** - Violet cable colour
**S2** - Red cable colour
**S3** - White cable colour
**S4** - Orange cable colour
**S5** - Pink cable colour
**S6** - Grey cable colour
**Tf** - Thermal fuse

## Type of Activation B24T-W

IMPORTANT: Risk of electric shock!

Switch off the power supply before working on any electrical equipment.

Only qualified electricians are allowed to work on the electrical system.

This type of activation is with provided cable connectors for the supply and communication unit (communication unit not part of the mechanism).

Actuator power supply: AC (50/60 Hz)/DC 24 V

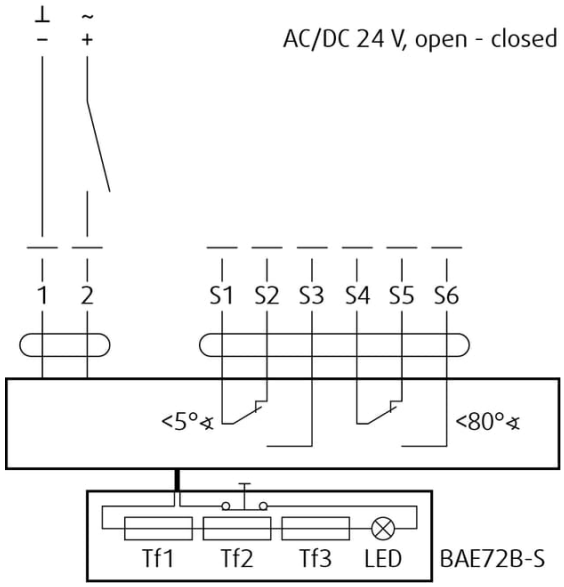


Notes:

- Supply via safety isolation transformer.
- Parallel connection of several actuators possible.
- Power consumption must be observed!

## Legend

**1** Blue cable colour (black for BF24-T) in connector 1

**2** Brown cable colour (white for BF24-T) in connector 1

**S1** Violet cable colour (white for BF24-T) in connector 2

**S2** Red cable colour (white for BF24-T) in connector 2

**S3** White cable colour (white for BF24-T) in connector 2

**S4** Orange cable colour (white for BF24-T) in connector 2

**S5** Pink cable colour (white for BF24-T) in connector 2

**S6** Grey cable colour (white for BF24-T) in connector 2

**Tf** Thermal fuse

## Type of Activation G24T-W

IMPORTANT: Risk of electric shock!

Switch off the power supply before working on any electrical equipment.

Only qualified electricians are allowed to work on the electrical system.

This type of activation is with provided cable connectors for the supply and communication unit (communication unit not part of the mechanism).

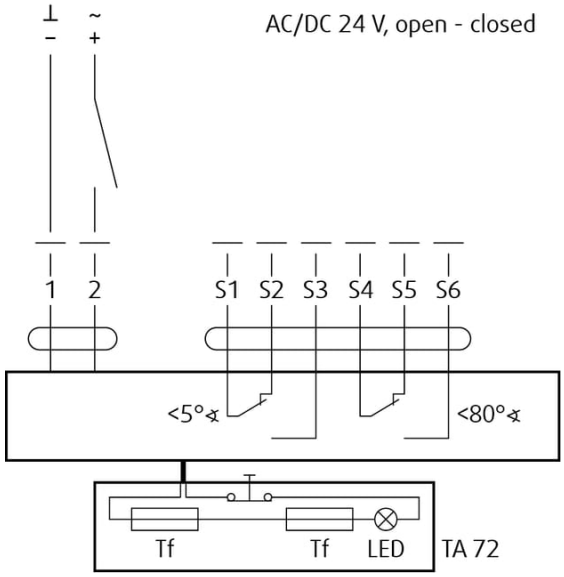


Notes:

- Supply via safety isolation transformer.
- Parallel connection of several actuators possible.
- Power consumption must be observed!

### Legend

**1** Black cable colour (black for BF24-T) in connector 1

**2** Red cable colour (white for BF24-T) in connector 1

**S1** Violet cable colour (white for BF24-T) in connector 2

**S2** Red cable colour (white for BF24-T) in connector 2

**S3** White cable colour (white for BF24-T) in connector 2

**S4** Orange cable colour (white for BF24-T) in connector 2

**S5** Pink cable colour (white for BF24-T) in connector 2

**S6** Grey cable colour (white for BF24-T) in connector 2

**Tf** Thermal fuse

## Type of Activation B24T-SR

IMPORTANT: Risk of electric shock!
Switch off the power supply before working on any electrical equipment.
Only qualified electricians are allowed to work on the electrical system.
Actuator power supply: AC (50/60 Hz)/DC 24 V

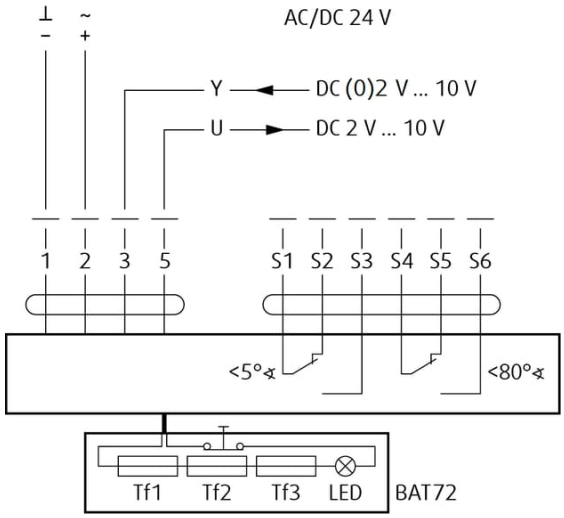


Notes:

- Supply via safety isolation transformer.
- Power consumption must be observed!

## Legend

**1** Blue cable colour
**2** Brown cable colour
**3** White cable colour
**5** Orange cable colour
**S1** Violet cable colour
**S2** Red cable colour
**S3** White cable colour
**S4** Orange cable colour
**S5** Pink cable colour
**S6** Grey cable colour
**Tf** Thermal fuse

## Type of Activation G24T-SR

IMPORTANT: Risk of electric shock!
Switch off the power supply before working on any electrical equipment.
Only qualified electricians are allowed to work on the electrical system.
Actuator power supply: AC (50/60 Hz)/DC 24 V

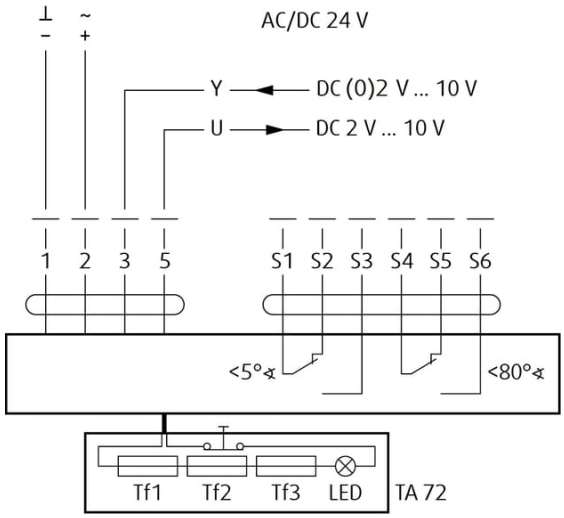


### Notes:

- Supply via safety isolation transformer.
- Power consumption must be observed!

### Legend

**1** Blue cable colour
**2** Brown cable colour
**3** Black cable colour
**4** Grey cable colour
**S1** Violet cable colour
**S2** Red cable colour
**S3** White cable colour
**S4** Orange cable colour
**S5** Pink cable colour
**S6** Grey cable colour
**Tf** Thermal fuse

## Type of Activation GST0

- The actuator and the control module are factory wired.
- Individual control of 2 fire  dampers
- Bus protocols (RS-485): BACnet MS/TP and Modbus RTU
- Automatic baud rate detection with BACnet
- Bus monitoring function

## LEDs status indication (GST0)

**LED color and type | LED state | Status**

Yellow (Closed) | ON | Damper closed

Green (Open) | ON | Damper open

Yellow and green | Blinks in parallel | Damper is moving

Yellow and green | Alternately blinks - interval 0.5 sec | Actuator did not reach the end switch position within set time

Yellow and green | Alternately blinks - interval 3 sec | Alarm active at damper: bus command = actuator open, actuator = in closed position

Power green | OFF | Power failure

Power green | ON | Power is connected

Yellow Rx | Blinks | Receive data

Green Tx | Blinks | Transmit data

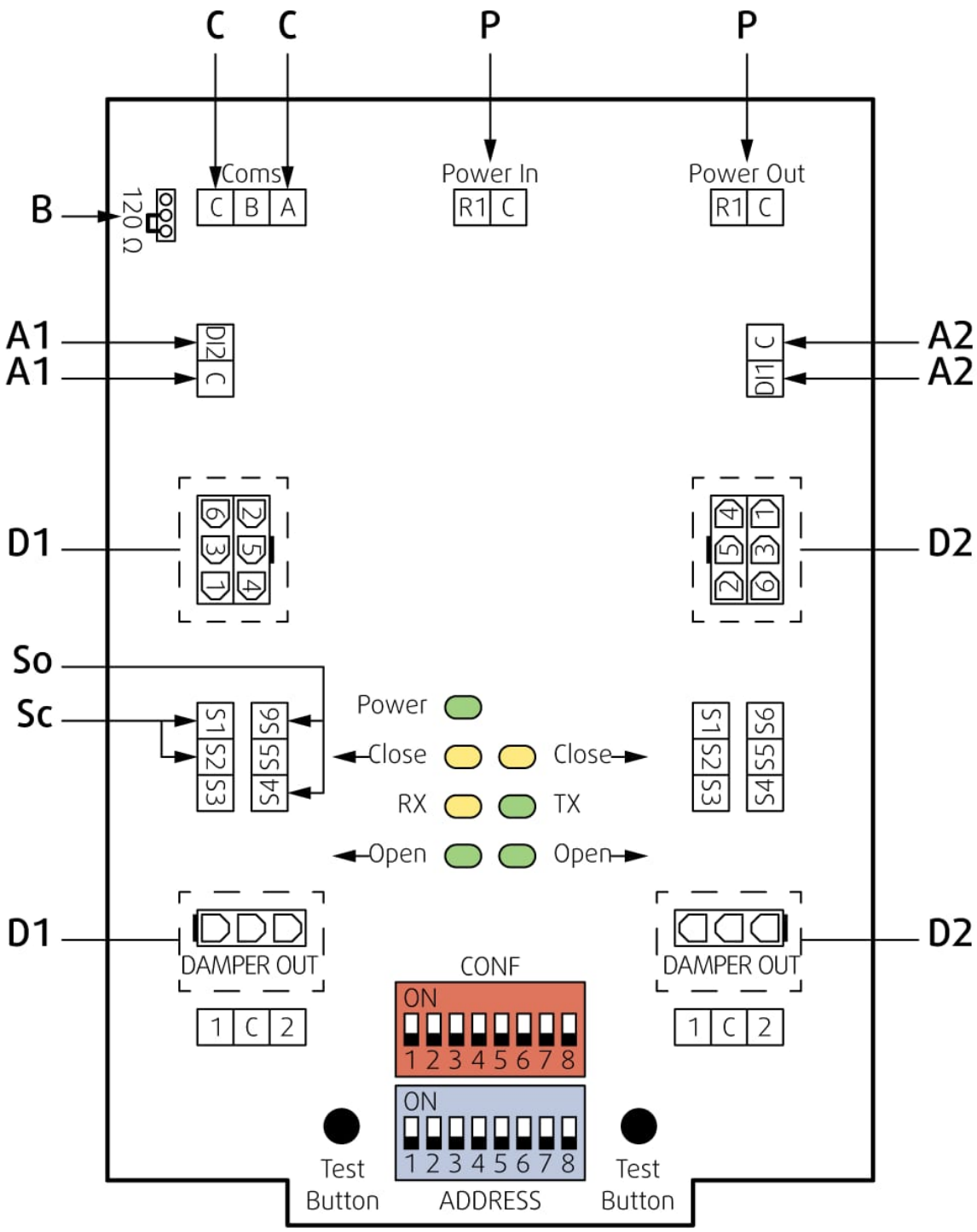


Notes:

- Caution! Main power supply voltage!
- Power consumption and switching thresholds must be observed!
- Combination of power supply voltage and safety extra-low voltage not permitted at the both auxiliary switches.

**IMPORTANT:**

If only one actuator is connected to the FSC-UFC24-2 the LEDs of the side where no actuator is connected indicate an alarm. A jumper has to be installed between S4 and S6 in the terminal where there is no actuator connected, to indicate an “opened” position in the LED. If the second connection is not activated via bus, there will be no alarm signal on the bus system.

## Legend

**A1, A2** Analog Application; Digital input for manual override can be selected via bus as „Normally Open“ (= standard open) or „Normally Closed“ (= standard closed) Default: „Normally Open“

**B** Position of line termination 120 ohm if FSC-UFC24-2 is last Modbus or BACnet device in line

**C** RS-485 Coms; Modbus RTU or BACnet MS/TP dip switch selectable

**D1, D2** Damper 1, Damper 2; Fire or smoke extraction application

**P** Main power 24 V AC/DC; Daisy chain from and to other FS-UFC24-2

**So** Contact open

**Sc** Contact closed

# Handling & Manipulation

Handling and manipulation must be done with care. For safety reasons, manipulate the damper in its closed position and whilst wearing gloves.

## Manual Activation Mechanism Replacement

- Press the test button
- Check the damper is in closed position
- Remove two front mechanism screws
- Remove the mechanism from the damper body
- Place the new mechanism onto the damper axis and base plate. The thermal link must fit inside the hole
- Fix the two top screws slightly (avoid damage to threads and bends to mechanism cover)
- Perform dampers functionality check

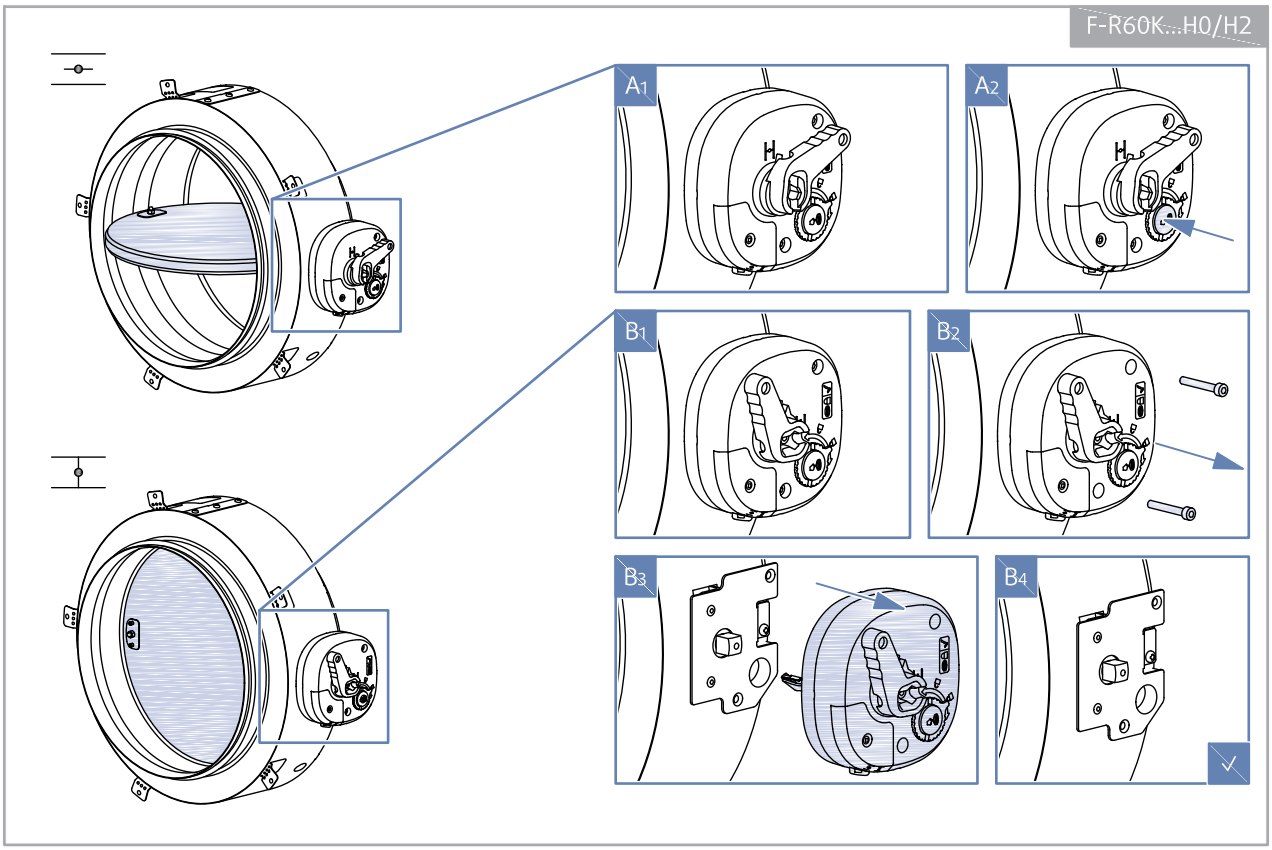

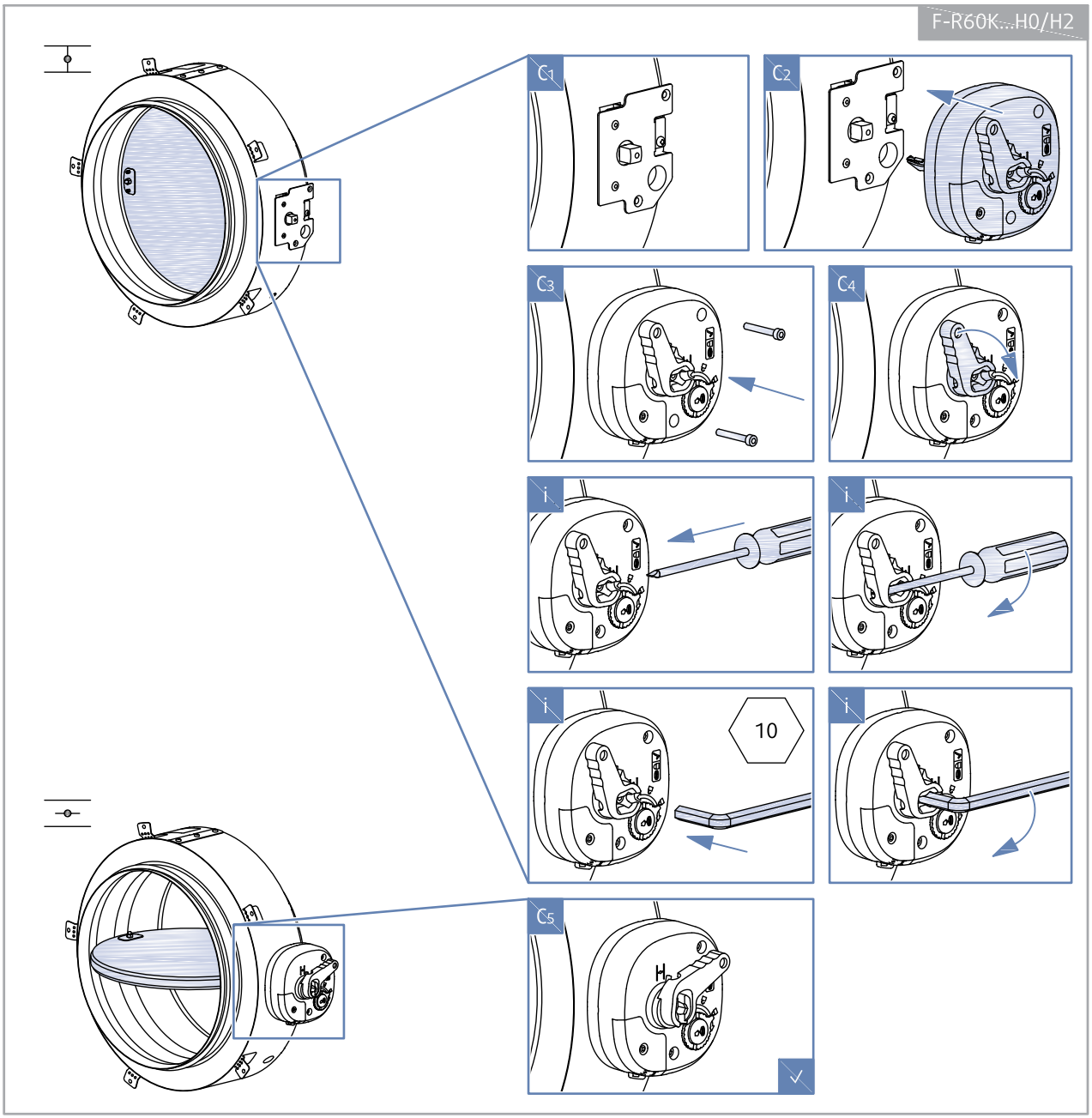
F-R60K...H0/H2
C1
C2
C3
C4
i
i
i
10
i
C5

# Fusible Thermal Link Replacement on Manual Activation Mechanism

- Press the test button and check if the damper is in closed position

Note: A coin can be inserted into a cutout on the button, which presses the button. At the same time it can be used for rotating the thermal link mechanism into unlocked position.

- Turn the thermal link mechanism into unlocked position. Easiest way is specified in the note
- Take out the thermal link rod of the mechanism and inspect it
- Remove the remaining parts of the thermal link you wish to replace
- Place the new thermal link on a hook. Push the other hook so you can place the link on it
- Check that the blade remained in closed position and that the axle indication is aligned
- Place the thermal link rod back to the mechanism
- Turn the thermal link mechanism into locked position
- Perform dampers functionality check

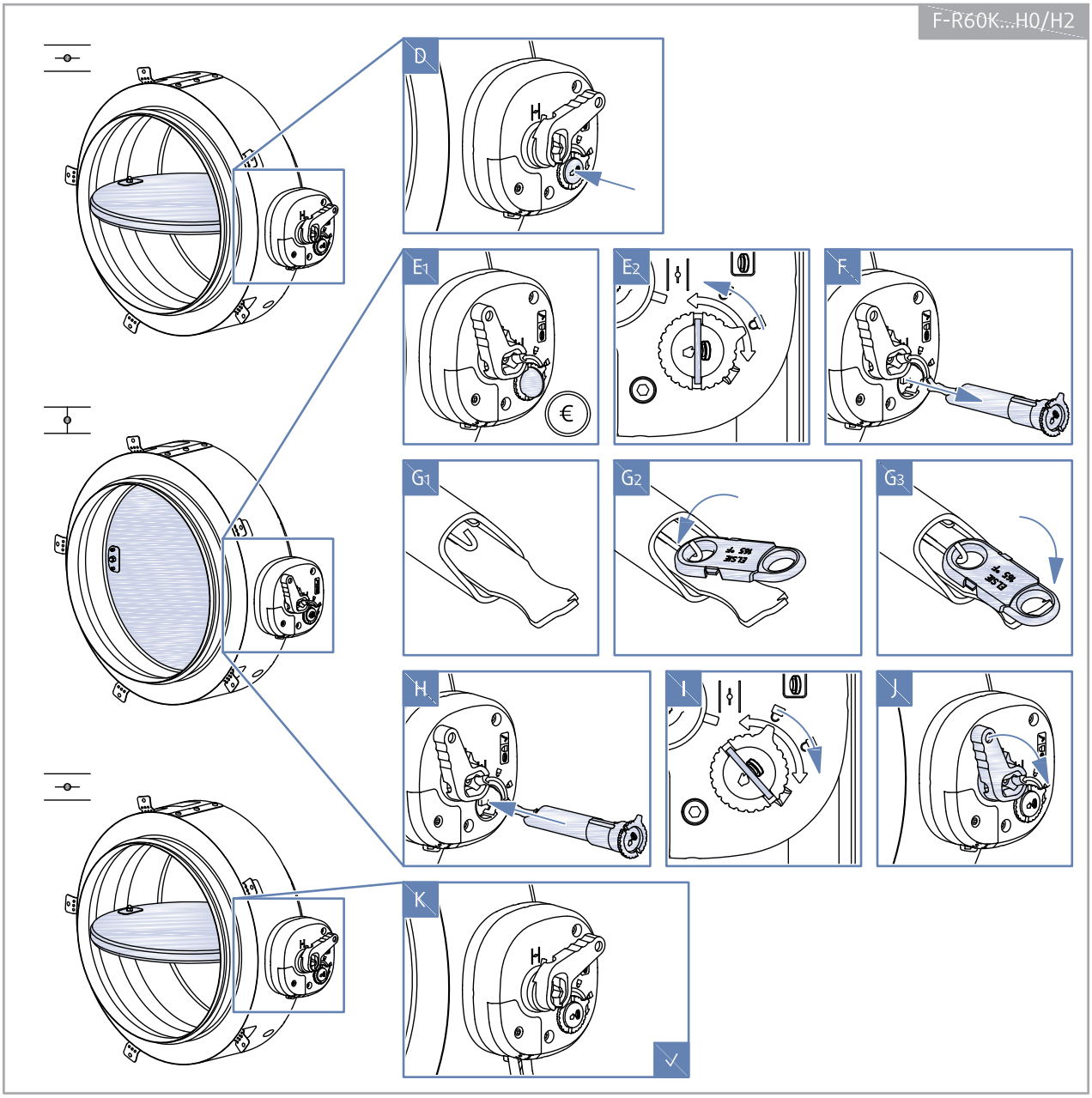

## Manual Activation Mechanism Microswitch Addition/Replacement

- Press the test button
- Check if the damper is in closed position
- Remove the screw of the microswitch cover. Remove the cover
- Break out the parts, where the cable will be placed
- Insert the microswitches as depicted on the symbol
- Lead the cables out through the corresponding holes
- Place the cover back and screw it to the mechanism

Note: A tightening strap can be used, but is not mandatory.

- Perform dampers functionality check

Note: The microswitches have pins on both sides. If one of the microswitches is damaged, the other one can replace it. It depends from the required indication of the damper blade position.

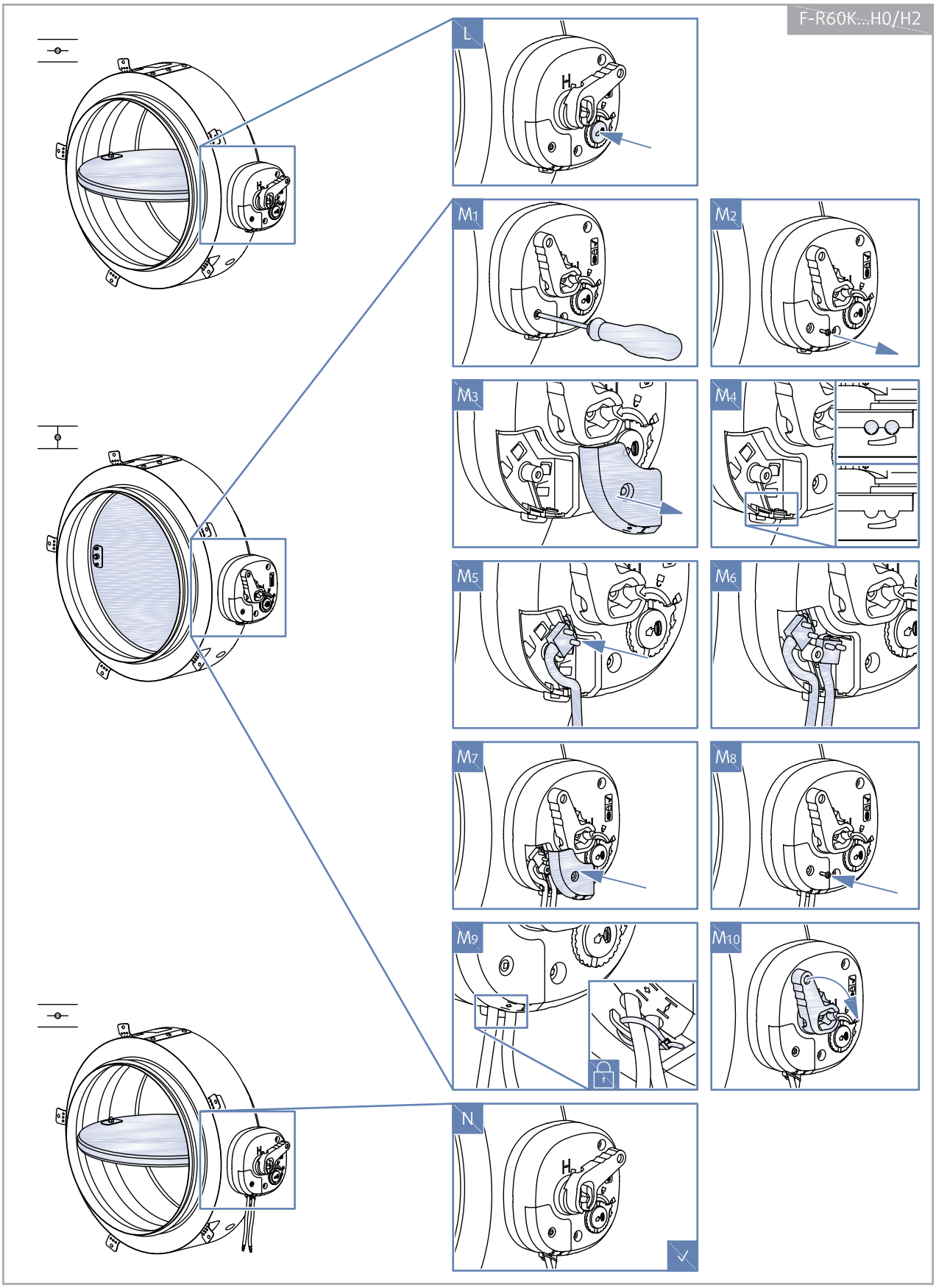
F-R60K...H0/H2
L
M1
M2
M3
M4
M5
M6
M7
M8
M9
M10
N

# Actuator Replacement and Thermal Fuse Replacement

**Disconnect main power supply**

- Remove two screws from the thermal fuse and remove the fuse from the damper body
- Check if the blade is in the closed position if not drive actuator manually to closed position
- Mark the upwards facing (visible) actuator side "L" or "R"
- Remove two front actuator screws
- Remove the actuator from the mechanism base plate
- Mark the shafts groove position

**Check the thermal fuse for damage and test. If needed un-click and replace the fuses bottom replaceable part**

- insert the fuse's bottom part into the cavity on dampers body
- Fix the two fuse screws
- Check that the blade remained in closed position and that the axle indication is aligned
- Place the actuator with the same side pointing upwards (as previously marked side "L" or "R") onto the dampers axis and base plate
- Fix the two top screws slightly (avoid damage to threads)
- Perform dampers functionality check

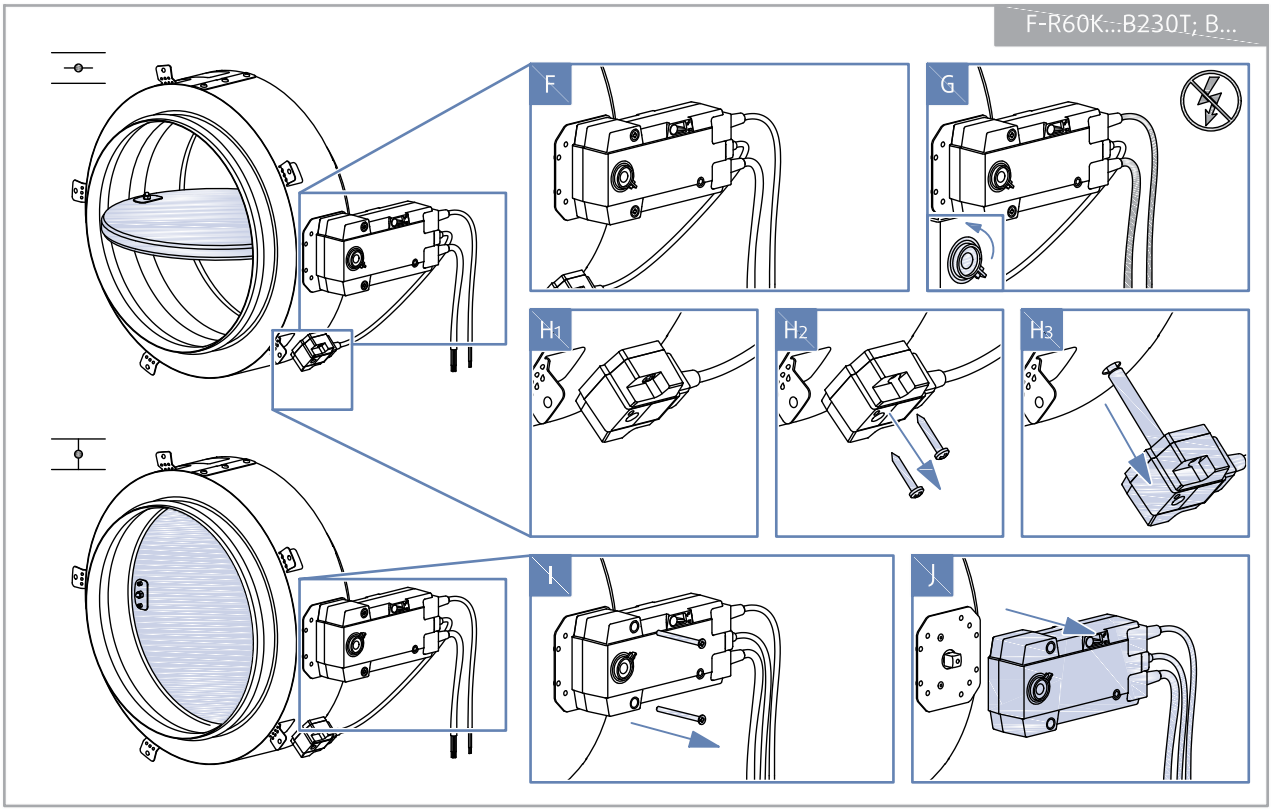

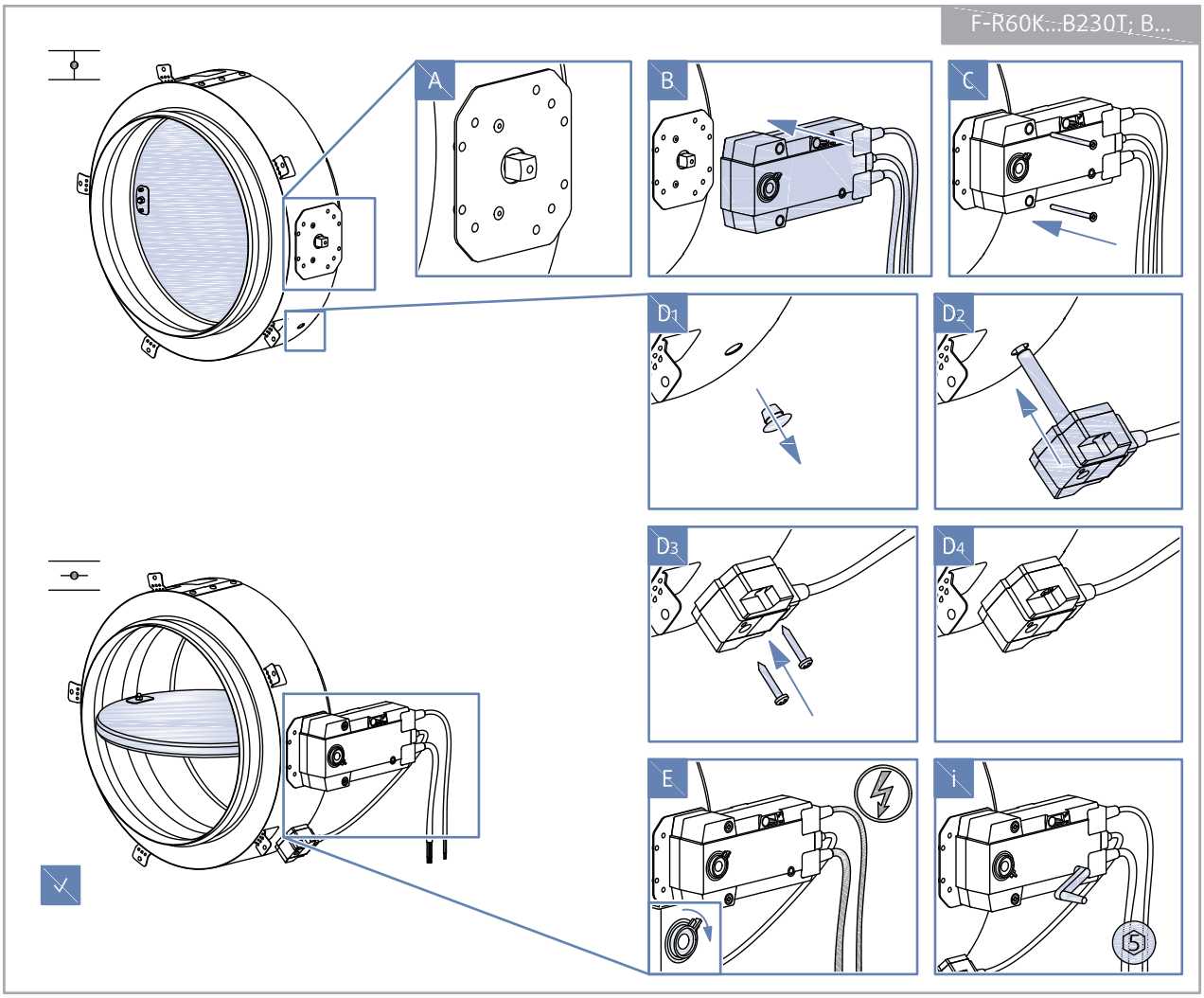
F-R60K...B230T; B...
A
B
C
D1
D2
D3
D4
E
i
5

# Operation Manual

**Warning: Damper blades are spring loaded in the open position and are closing very quick. To avoid injury, make sure to keep the blade movement area clear while manipulating with the fire damper.**

After installation, it is necessary to adjust the damper into its operating position – open the fire damper.

**Manually Operated Activation Mechanism**

Turn the crank into the "OPEN" position. The damper blade must remain in the open position.

**Spring Return Actuator Operated Activation Mechanism**

Connect the electric driving mechanism to the relevant electric power supply (see Electrical Connection section). The electromotor is activated and adjusts the damper into its open position.

## Functionality Check

### Manually Operated Activation Mechanism

- While performing the check, focus on the thermal fuse link's integrity and if the thermal fuse is in locked position. Check the correct position of the damper blades after their retention in the OPEN and CLOSED positions.
- Open the damper - turn the thermal link mechanism into locked position so that the indicator arrow is pointing to the lock position symbol. Turn the crank (P15) by hand or by using a tool (hexagonal bent wrench No. 10 or srewdriver). Turn the crank so that the indicator arrow (P13) is pointing to the OPEN position (symbol), the crank needs to remain in the "OPEN" position, and the microswitch for the open position indication must be pushed (if installed).
- Close the damper – release the mechanism by pressing the release button (P14), the crank will adjust its indicator arrow (P13) to point to the CLOSED position (symbol) and remain locked in this position, then the microswitch for the closed position indication must be pushed (if installed).
- Open the damper - thermal link mechanism must be in locked position. Turn the crank (P15) using a tool (hexagonal bent wrench No. 10 or srewdriver). Turn the crank so that the indicator arrow is pointing to the OPEN position (symbol), the crank needs to remain in the "OPEN" position, and the microswitch for the open position indication must be pushed (if installed).

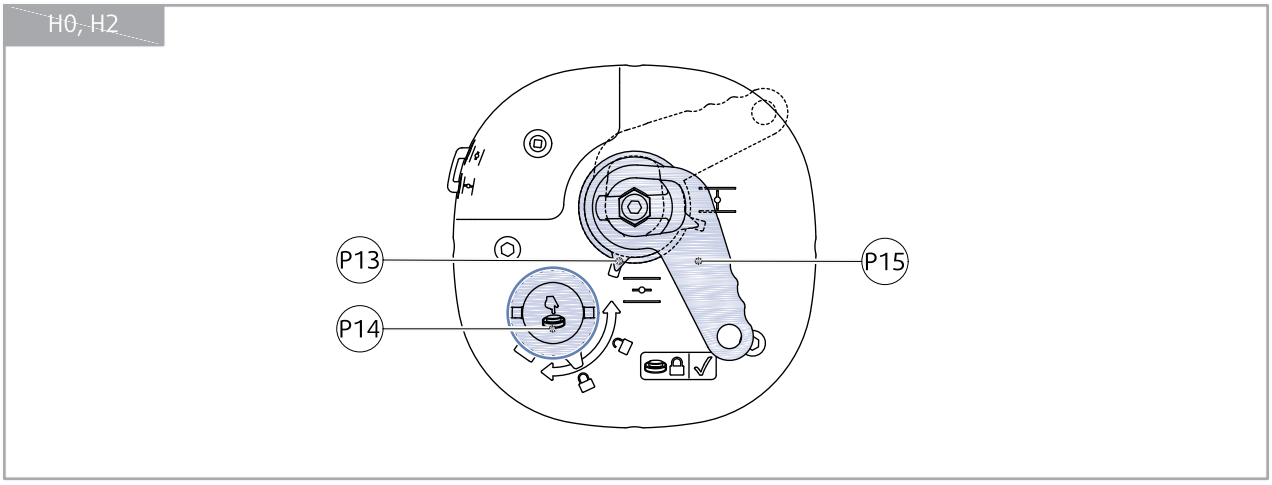

## Spring Return Actuator Operated Activation Mechanism

- While performing the check, focus on the thermal fuse link's integrity and a correct position of the damper blades after their detention in the OPEN and CLOSED positions.
- The fire damper must open automatically after the actuator receives power – the arrow (P13) on the actuator axis in open possition must point to 90°.
- Press the control switch (P12) on the Thermo electric fuse and hold it until the fire damper is fully closed – the arrow (P13) on the actuator axis in closed possition must point to 0° - safety possition.
- Release the control switch (P12) on the Thermo electric fuse. The fire damper must become fully open – the arrow (P13) on the actuator axis in open possition must point to 90° - operating position.

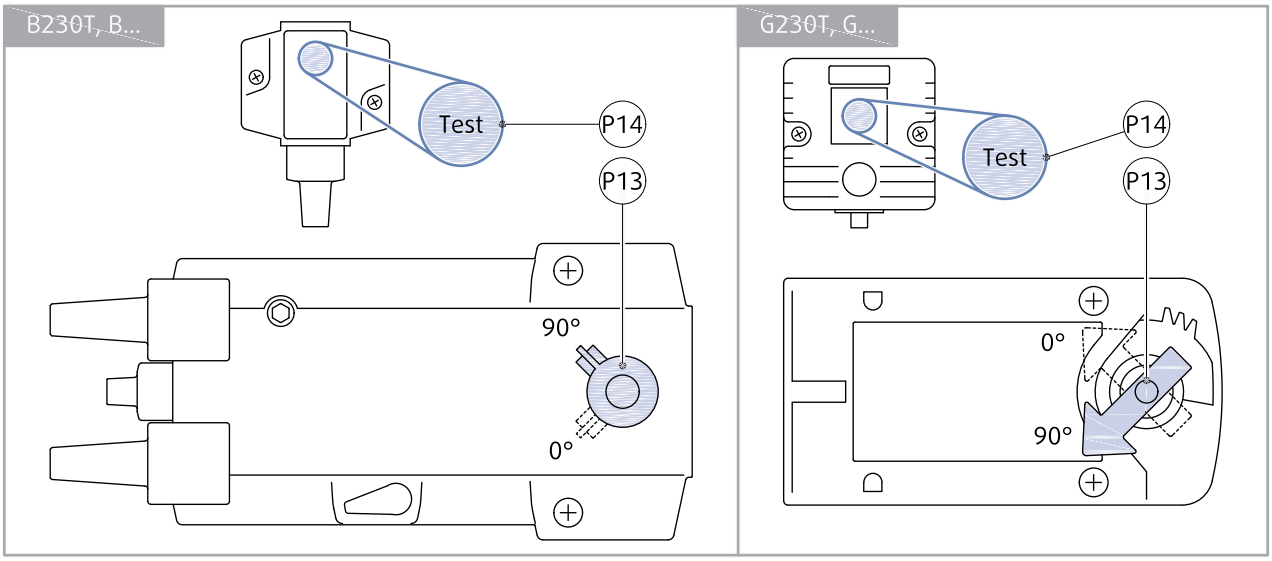

## Damper Inspection

The activation mechanism keeps the dampers on stand-by during their entire life cycle in accordance with this manual issued by the manufacturer. It is not permitted to alter the dampers in any way nor perform any changes to their structure without the manufacturer's consent.

The operator performs regular checks of the dampers as per established regulations and standards at least once every 12 months. The check needs to be performed by an employee who has been specifically trained for this purpose. The current fire damper condition determined during the inspection needs to be entered into the "Operating Journal" along with the date of the inspection, the legible name, surname and signature of the employee who performed the inspection. The Operating Journal includes a copy of the employee's authorization.

If any discrepancies are discovered, these need to be entered in the Operating Journal along with a proposal for their removal. The Operating Journal can be found in product "Documents" section on design.systemair.com. Immediately after the installation and activation of the damper, it needs to be checked under the identical conditions as apply to the above mentioned 12-month inspections.

The visual check ensures that visible damages on the inspected damper parts are seen. On its external side, the damper housing and the activation mechanism are checked. Due to the need to perform a visual check of the damper's internal parts, open inspection lid connected to the damper or remove the flexible connection connected to the damper. Visual check can be performed with endoscopic camera through the hole where the thermal fuse is installed.

The damper's internal casing, thermal fuse, seals, foaming substance, the damper blade condition and accuracy of its closure during its leaning against the backstop in the closed position must all be checked. There must not be any strange objects or a layer of impurities from the air distribution systems inside the damper.

NEVER INSPECT THE DAMPERS WHEN THERE IS AIR FLOWING IN THE DUCT SYSTEM!

## Recommended Inspection Steps According to the EN 15 650:

1. Damper identification
2. Date of inspection
3. Inspecting electric connection of the activation mechanism (where applicable)
4. Inspecting damper for cleanliness and possible need for cleaning (where needed)
5. Inspecting blade and sealing condition, possible correction and logging (where needed)
6. Inspecting proper fire damper closure
7. Inspecting damper functionality – opening and closing using the control system, physical examination of the damper's behavior, possible correction and logging (where needed)
8. Inspecting end switches' functionality in the open and closed position, possible correction and logging (where needed)
9. Inspect whether the damper is fulfilling its role as part of the regulation system (where needed)
10. Inspect whether the damper remains in its standard operating position.
11. The damper is usually part of a system. In that case the whole system needs to be checked as described in its operation and requirements published by the builder of the system.

# Supplement

Any deviations from the technical specifications contained in SystemairDESIGN and the terms should be discussed with the manufacturer. We reserve the right to make any changes to the product without prior notice, provided that these changes do not affect the quality of the product and the required parameters.

Handbook_F_R60K_en-GB
design.systemair.com
www.systemair.com



Original instructions 2024-12-19

DOCUMENT VERSION 2