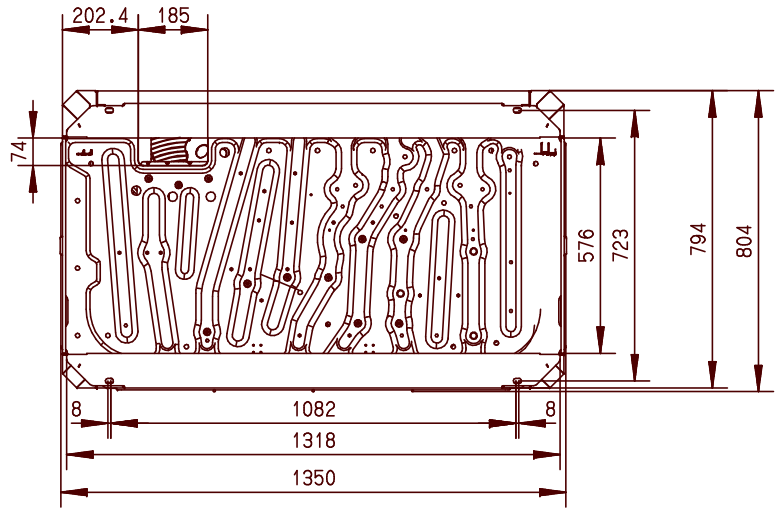

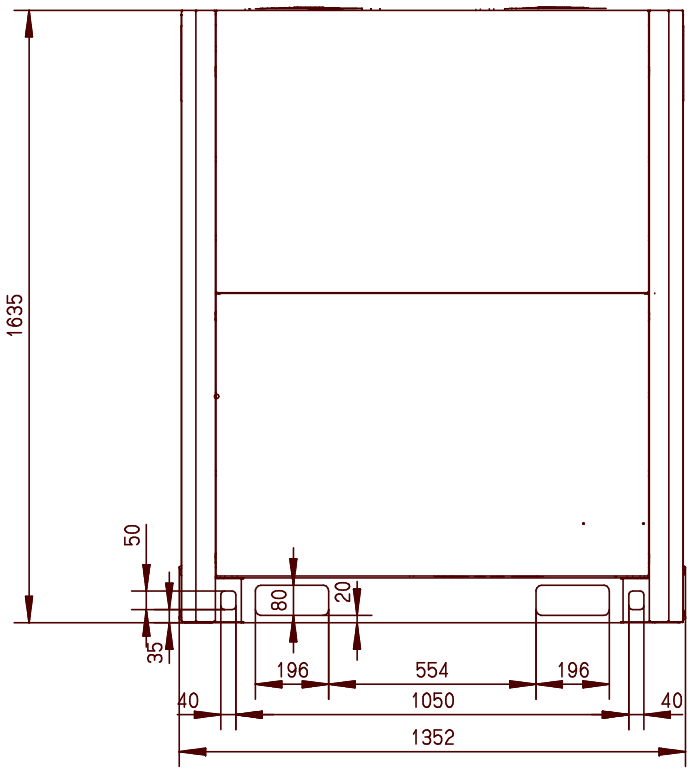

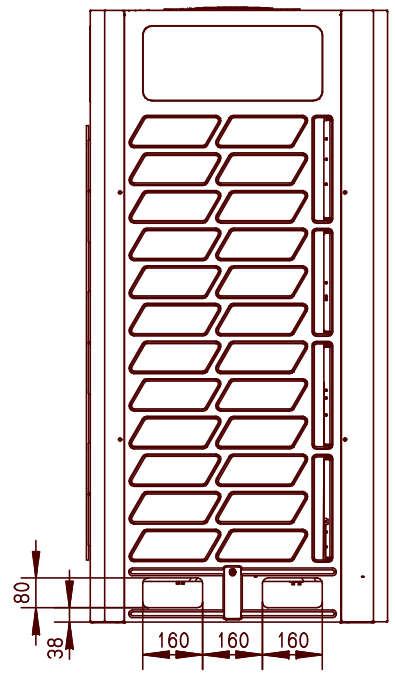

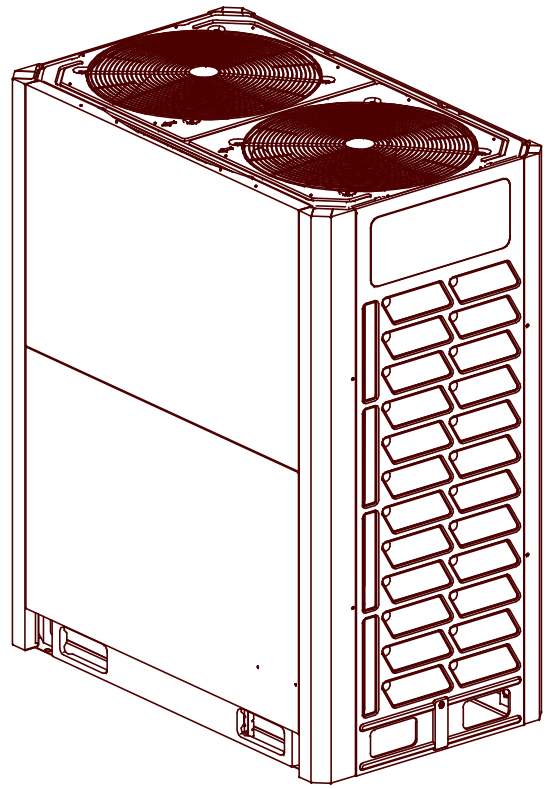

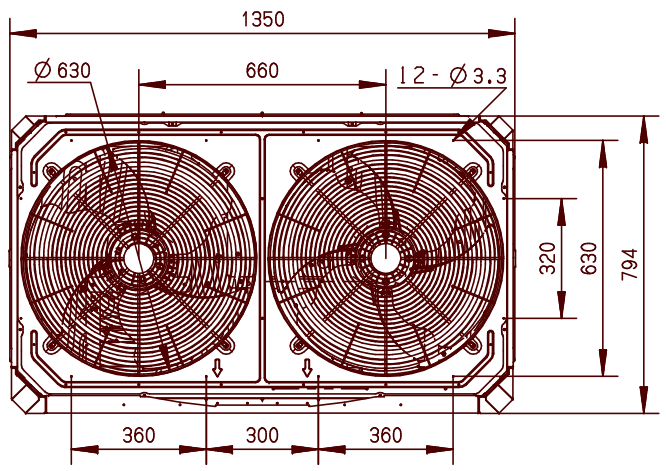

SYSVRF2 560 AIR EVO HP R #316164
SYSVRF2 M615 AIR EVO HP R #316219

systemair
Seehöfer Str. 45
DE-97944 BOXBERG
Tel. 07930/9272-0
info@systemair.de
Fax 07930/9272-92
www.systemair.de

A3