SYSVRF**2 DUCT**

GB **Medium ESP Duct VRF in**door unit
INSTALLATION MANUAL

systemair

Contents

Installation Manual..... 1
Accessories..... 2
1. Before Installation..... 3
2. Choosing an Installation Site..... 3
3. Indoor Unit Installation..... 4
4. Refrigerant Piping Installation 6
5. Water Discharge Piping Installation 7
6. Air Duct Installation 8
7. Electrical Wiring.....10
8. On-site Configuration 11
9. Test Run 13
10. Part Names.....15
11. The Explain Of The Display Panel.....15
12. Air Conditioner Operations and Performance.....16
13. Adjusting Air Flow Direction.....16
14. Maintenance 17
15. Symptoms That Are Not Faults.....18
16. Troubleshooting 18

Installation Manual

Safety Precautions
Read carefully before you install the air conditioner to make sure that the installation is correct.

There are two types of precautions as described below:

⚠ Warning: Failure to comply may lead to death or serious injury.

⚠ Caution: Failure to comply may lead to injury or damage of the unit. Depending on the situation, this may also lead to serious injury.

Once the installation is completed, and the unit has been tested and verified to be operating normally, please explain to the customer how to use and maintain the unit according to this manual. In addition, make sure that the manual is kept properly for future reference.

⚠ Warning

- Installation, maintenance and cleaning the filter work must be carried out by professional installers. Refrain from doing it yourself. Improper installation may cause water leakage, electric shock, or fire.
- Install the air conditioner according to the steps described in this manual. Improper installation may cause water leakage, electric shock, or fire.
- For installation in smaller rooms, you must adopt the relevant measures to prevent the refrigerant concentration from exceeding the limit. Please consult the sales agent on the relevant measures required. A high concentration of refrigerant in an airtight space can cause oxygen insufficiency (anoxia).
- Make sure the required parts and accessories are installed. Using unspecified parts may cause the air conditioner to malfunction or drop, as well as water leakage, electric shock, and fire.
- Mount the air conditioner in a place that is sturdy enough to bear its weight. If the base is not secured properly, the air conditioner may drop leading to damages and injuries.
- Take in full consideration to the effects of strong winds, typhoons and earthquakes, and reinforce the installation. Improper installation may cause the air conditioner to drop leading to accidents.
- Make sure a standalone circuit is used for the power supply. All electrical parts must comply with the local laws and regulations, and what is stated in this installation manual. The installation works must be carried out by a professional and qualified electrician.
- Insufficient capacity or improper electrical works can lead to electric shock or fire.
- Use only electrical cables that fulfil the specifications. All wiring on site must be carried out in accordance with the connection diagram attached to the product. Make sure that there are no external forces acting on the terminals and wires. Improper wiring and installation may cause a fire.
- Make sure the power cord, communication and controller wiring are straight and level when you are working on the connections, and the cover on the electric box is tight. If the electric box is not closed properly, it may lead to electric shock, fire or overheating of electrical components.
- If the refrigerant leaks during installation, open the doors and windows immediately to ventilate the area. Refrigerant can produce toxic gases when in contact with fire.
- Switch off the power supply before touching any electrical component.
- Do not touch the switch with wet hands. This is to prevent electrical shocks.
- Do not come in direct contact with the refrigerant leaking from the connections of refrigerant piping. Otherwise, it may lead to frostbite.
- The air conditioner must be grounded. Do not connect the earth line (ground) to gas piping, water piping, lightning rods or telephone earth lines. Improper grounding can lead to electric shock or fire, and may cause mechanical failure due to current surges from lightning and so on.
- The earth leakage circuit breaker must be installed. There is a risk of electric shock or fire if the earth leakage circuit breaker is not installed.
- The appliance shall be installed in accordance with national wiring regulations.
- The appliance must be installed 2,3m above floor.
- If the supply cord is damaged, it must be replaced by the manufacturer or its service agent or a similarly qualified person in order to avoid a hazard.
- An all-pole disconnection switch having a contact separation of at least 3mm in all poles should be connected in fixed wiring.
- The temperature of refrigerant circuit will be high, please keep the interconnection cable away from the copper tube.
- The power cord type designation is H05RN-For above/H07RN-F.
- Check the power supply before installation. Ensure that the power supply must be reliably grounded following local, state and National Electrical Codes. If not, for example, if the ground wire is detected charged, installation is prohibited before it is rectified. Otherwise, there is a risk of fire and electric shock, causing physical injury or death.
- Check the electric wire, water and gas pipeline layout inside the wall, floor and ceiling before installation. Do not implement drilling unless confirm safety with the user, especially for the hidden power wire. An electroprobe can be used to test whether a wire is passing by at the drilling location, to prevent physical injury or death caused by insulation broken cords.

⚠ Caution

- Install the water discharge piping according to the steps described in this manual, and make sure that the water discharge is smooth, and the piping is properly insulated to prevent condensation. Improper installation of the water discharge piping may lead to water leakage, and damage the indoor furniture.
- When mounting the indoor and outdoor units, make sure the power cord is installed at a distance of at least 1 m away from any TV or radio so as to prevent noise or interference with the images.
- The refrigerant required for the installation is R410A. Make sure the refrigerant is correct before installation. Incorrect refrigerant may cause the unit to malfunction.
  Do not install the air conditioner in the following places:
  1. Where there is oil or gas, such as the kitchen. Otherwise, the plastic parts may age, fall off or water may leak.
  2. Where there are corrosive gases (such as sulphur dioxide). Corrosion in the copper pipes or welded parts may cause the refrigerant to leak.
  3. Where there are machines emitting electromagnetic waves. Electromagnetic waves may interfere with the control system, causing the unit to malfunction.

4. Where there is a high salt content in the air. When exposed to air with a high salt content, the mechanical parts will experience accelerated ageing which will severely compromise the service life of the unit.
5. Where there are major voltage fluctuations. Operating the unit using a power supply system that has large voltage fluctuations will reduce the service life of the electronic components, and cause the unit's controller system to malfunction.
6. Where there is a risk of leakage of flammable gases. Examples are sites that contain carbon fibres or combustible dust in the air, or where there are volatile combustibles (such as diluent or petrol). The above gases may cause explosion and fire.
7. Do not touch the fins of the heat exchanger as this may lead to injury.
8. Some products use the PP packing belt. Do not pull or tug on the PP packing belt when you transport the product. It will be dangerous if the packing belt breaks.
9. Note the recycling requirements for nails, wood, carton and other packaging materials. Do not discard these materials directly as these may lead to bodily harm.
10. Tear up the packaging bag for recycling to prevent children from playing with it, and leading to suffocation.
11. The appliance shall not be installed in the laundry.

- When the product is used for comercial application. This appliance is intended to be used by expert or trained users in shops, in light industry and on farms, or for commercial use by lay persons,the sound pressure level is below 70 dB(A).

Accessories

Verify that the air conditioner includes the following accessories.

Name	Appearance	Qty	Function
1. Installation Manual for Indoor Unit		1	This manual
2. Insulation piping	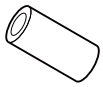	2	For insulation of piping connections
3. Water discharge hose	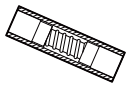	1	Connect the drainage outlet of the indoor unit to the PVC water piping.
4. Ring clamp for water discharge pipes		1	To clamp the water discharge hose tightly to the drainage outlet of the indoor unit.
5. Brass nuts		1	For use in the installation works of connecting piping
6. Sponge	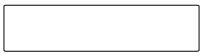	1	Included with 80-140 models only
7. Display controller assembly		1	Receive remote signals
8. Connecting wire		1	Connect the wire controller

Accessories to purchase locally

Code	Name	Appearance	Dimensions	Qty	Note
1	Copper pipe		Choose and purchase copper pipes that correspond to the length and size calculated for the selected model in the installation manual of the outdoor unit and your actual project requirements.	To purchase based on actual project requirements.	Use to connect indoor refrigerant piping.
2	PVC pipe for water discharge		Inner diameter, 25 mm.	To purchase based on actual project requirements.	Use to discharge condensed water from the indoor unit.
3	Insulation casing for piping		The inner diameter is based on the diameter of the copper and PVC pipes. The thickness of the pipe casing is 10 mm or more. Increase the thickness of the casing (20 mm or thicker) when the temperature exceeds 30°C or the humidity exceeds RH80%.	To purchase based on actual project requirements.	Protect piping from condensation.
4	Expansion hook anchor	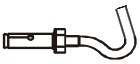	M10	To purchase based on actual project requirements.	For installation of indoor unit.
5	Mounting hook		M10	To purchase based on actual project requirements.	For installation of indoor unit.
6	Tie		To purchase based on actual project requirements.	To purchase based on actual project requirements.	Tie for connecting wire

1. Before Installation

1.1 Determine the route to move the unit to the installation site.

2.2 First unseal and unpack the unit. Then hold the four lifting lugs to move the unit. Refrain from exerting force on other parts of the unit, especially the refrigerant piping, water discharge piping, and plastic parts.

2. Choosing an Installation Site

2.1 Choose a site that fully complies with the following conditions and user requirements to install the air conditioning unit.

- Well ventilated.
- Unobstructed airflow.
- Strong enough to bear the weight of the indoor unit.
- Ceiling has no obvious slant.
- There is sufficient space for repair and maintenance work to be carried out.
- No leakage of flammable gas.
- The length of the piping between the indoor and outdoor units is within the permitted range (refer to the manual on installation of the outdoor unit).
- The static pressure of the air duct of the indoor unit is within the permitted range (see 6.2 Fan performance).

2.2 Install with M10 or W3/8 lifting bolts.

2.3 The space required for installation (unit: mm) is shown in Figure 2.1:

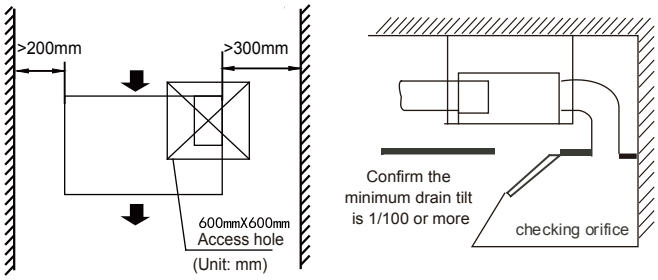

Figure 2.1

2.4 The air return plenum is adjusted based on the on-site installation space:
There are two kinds of air return modes for this series of models. One is back return air which is the factory default. The other is bottom air return which can be customized or adjusted on-site. Refer to the following diagrams on the adjustment method.

Remove back cover plate assembly

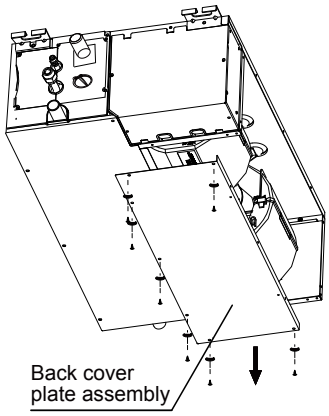

Install back cover plate assembly

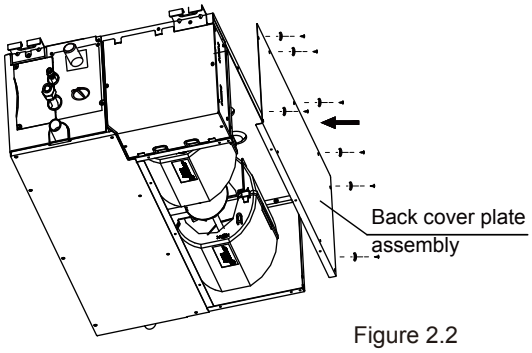

Figure 2.2

Install the air return frame, air return panel, and filter.

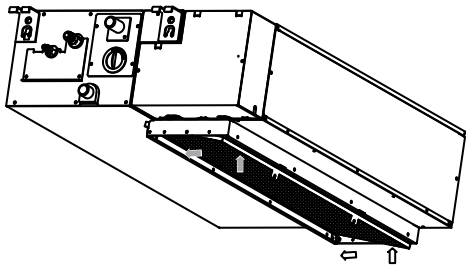

Figure 2.3

2.5 Air Inlet Panel for Air Return Plenum

Note

1. In creating the air return plenum on the air inlet panel, make sure the air grilles are angled such that they are parallel to the direction of the air inlet. See Figure 2.4.
2. There should be no angle between the air inlet grille and the direction of the air inlet, otherwise the noise level will increase. For example, the method used to create the air inlet grille in Figure 2.5 is wrong.
3. When the air outlet panel is connected to the air outlet flange of the unit body via the metallic air diffuser, make sure that the sheet metal contact surface is properly sealed and insulated using sponge, as shown in Figure 2.6.

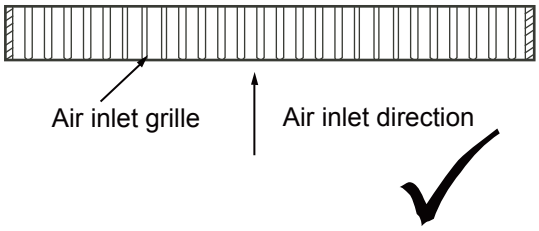

Figure 2.4

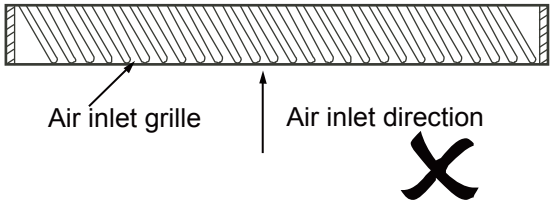

Figure 2.5

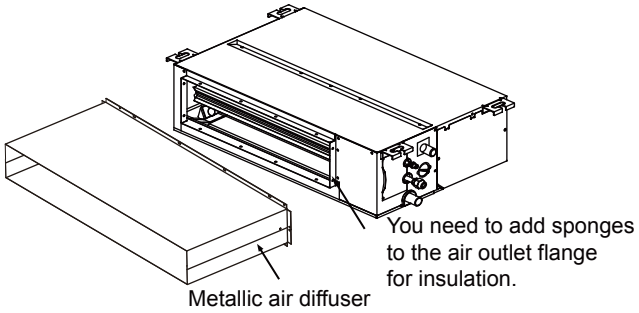

Figure 2.6

3. Indoor Unit Installation

Make sure that only specified components are used for the installation works.

> ⚠ Note
>
> 1. Install the air conditioner in a location with sufficient strength to support the weight of the unit.
> The unit may drop and cause personal injury if the location is not strong enough.
> 2. Carry out the specified installation works to prevent strong winds or earthquakes.
> 3. Improper installation may cause the unit to drop leading to accidents.

3.1 Lifting of the Indoor Unit

1. Install with Φ10 lifting bolt
   1) Use the Φ10 lifting bolt.
   2) Ceiling removal: As each building structure is different, discuss with the interior decoration workers of the building about the specific details.
      a. Ceiling treatment: Reinforce the ceiling pedestal to make sure that the ceiling is level and to prevent ceiling vibrations.
      b. Cut off and dismantle the ceiling pedestal according to the unit installation dimensions.
      c. Reinforce the remaining surface after the ceiling is removed. Add further reinforcements to the pedestal on two ends of the ceiling.
      d. Once the main unit has been lifted and mounted, carry out the piping and wiring works within the ceiling. Determine the outlet direction of the piping after the installation site has been finalized.

For a site where the ceiling is already available, first connect and put in position the refrigerant piping, water discharge piping, connecting wires of the indoor unit, and communication wiring before you lift and mount the unit.

2. Install the indoor unit
   1) Lift the indoor unit to the lifting bolt.
   2) Install and make sure that the indoor unit is level using tools like a spirit level. Water leakage is possible if the installation is not level.

3.2 Installation with Lifting Bolts

Refer to the following table on installation using the lifting bolts (Table 3.1).

Table 3.1

Wooden structure	Original concrete slab structure
Secure the square rod on the beam to set the lifting bolts. 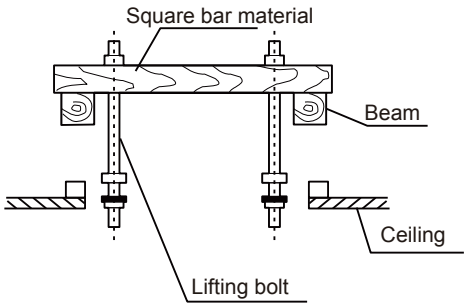	Use embedded bolts, and pull bolts. 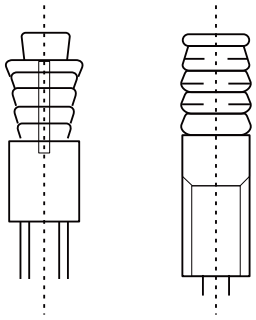
Steel framework	**Newly set concrete slab structure**
Directly set and use an angled steel rod for support. 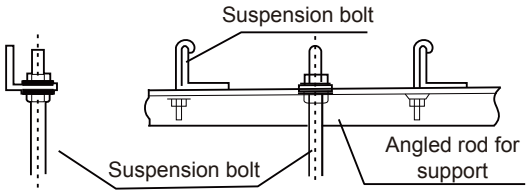	Use embedded appliances, and embedded bolts. 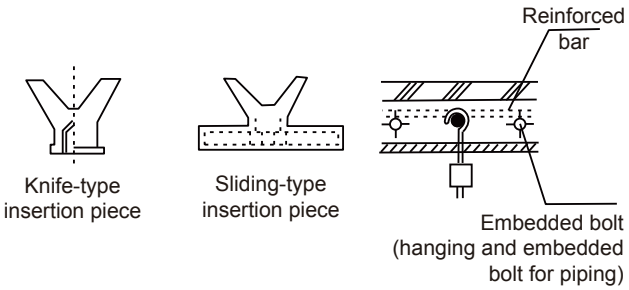

> ⚠ Caution
>
> - All bolts should be made from high quality carbon steel (with galvanized surface or other rust prevention treatment) or stainless steel.
> - How the ceiling should be handled will differ with the type of building. For specific measures, please consult the building and renovation engineers.
> - How the lifting bolt is secured depends on the specific situation, and it must be secure and reliable.

3.3 Installation of the Indoor Unit

1. Adjust the positions of the nuts, the size of the gap between the washer (bottom) and the ceiling should be based on the actual construction works. See Figure 3.1.
2. Slot the nuts of the lifting bolts in the oblong holes of the lifting lugs.
3. Use a spirit level to verify that the unit body is level. (do not tilt downwards towards the side where no water is discharged. Best is to tilt to where water is discharged). See Figure 3.2.

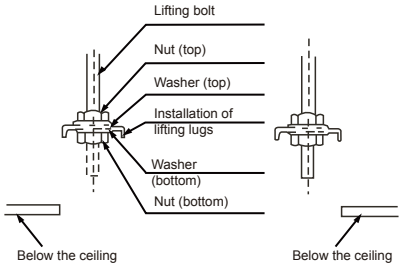

Figure 3.1

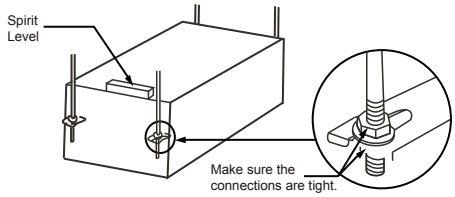

Figure 3.2

3.4 Dimensions

Dimensions of the unit body

Unit: mm

External dimensions and size of air outlet opening:

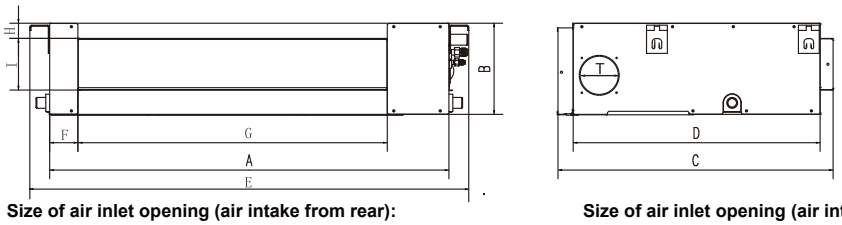

Size of air inlet opening (air intake from rear):

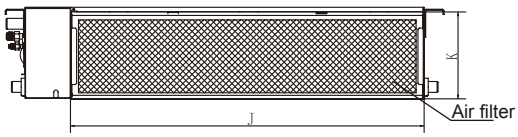

Size of air inlet opening (air intake from below):

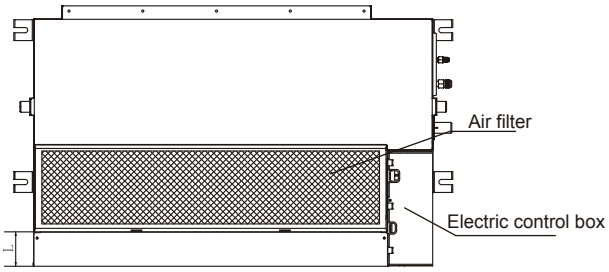

Distance between the lugs

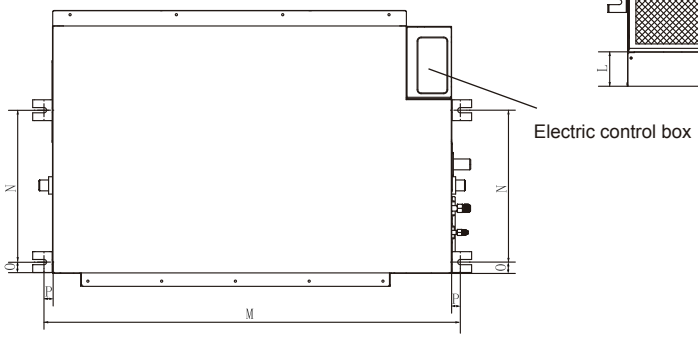

Figure 3.3

Table 3.2

Model	External dimension					Size of air outlet opening				Size of air inlet opening			Spacing Between Lugs				Fresh air inlet diameter
	A	B	C	D	E	F	G	H	I	J	K	L	M	N	O	P	T
22~36	700	210	500	450	780	45	512	17	145	570	180	-	740	350	35	20	Φ92
45~56	920	210	500	450	1000	45	732	17	145	790	180	-	960	350	35	20	Φ92
71	1140	210	500	450	1220	45	950	17	145	1010	180	-	1180	350	35	20	Φ92
80~112	1140	270	775	710	1230	65	933	35	179	1035	260	20	1180	490	26	20	Φ125
140	1200	300	865	800	1290	85	969	40	204	1094	288	45	1240	500	26	20	Φ125

⚠ Caution

The indoor unit can be mounted at a height of 2.5 ~ 3.5 metres (2.5 ~ 4 metres for 125 ~ 140 models). As the mounting height of the unit increases, when the unit is operating in the heating mode, as hot air rises, the heating experience in the vicinity of the ground will become worse.

Dimensions of the gas/liquid pipe

Table 3.3

Pipe Material		Copper Pipe for Air Conditioner				Refrigerant
Model		22~45	56~71	80~90	112~140	
Size(mm)	(Liquid side)	Φ6.4	Φ9.5	Φ9.5	Φ9.5	R410A
	(Gas side)	Φ12.7	Φ15.9	Φ15.9	Φ15.9	

4. Refrigerant Piping Installation

4.1 Length and Level Difference Requirements for the Piping Connections to the Indoor and Outdoor Units

The length and level difference requirements for the refrigerant piping are different for different indoor and outdoor units. Refer to the installation manual of the outdoor unit.

4.2 Piping Material and Size

1. Piping material: Copper pipes for air handling.
2. Piping size: Choose and purchase copper pipes that correspond to the length and size calculated for the selected model in the installation manual of the outdoor unit and your actual project requirements.

4.3 Piping Layout

1. Seal the two ends of the piping properly before you connect the indoor and outdoor piping. Once unsealed, connect the piping of the indoor and outdoor units as quickly as possible to prevent dust or other debris from entering the piping system via the unsealed ends, as this may cause the system to malfunction.
2. If the piping needs to go through walls, drill the opening in the wall, and place accessories like casings and covers for the opening properly.
3. Place the refrigerant connecting piping and the communication wiring for the indoor and outdoor units together, and bundle them tightly to make sure air does not enter and condensate to form water that may leak from the system.
4. Insert the bundled piping and wiring from outside the room through the wall opening into the room. Be careful when you lay out the piping. Do not damage the piping.

4.4 Piping Installation

- Refer to the installation manual attached with the outdoor unit on installation of the refrigerant piping for the outdoor unit.
- All gas and liquid piping must be properly insulated; otherwise, this may cause water to leak. Use heat insulation materials that can withstand high temperatures above 120°C to insulate the gas pipes. In addition, the insulation of the refrigerant piping should be reinforced (20 mm or thicker) in situations where there is high temperature and/or high humidity (when part of refrigerant piping part is higher than 30°C or when the humidity exceeds RH80%). Otherwise, the surface of the heat insulation material may be exposed.
- Before the works are carried out, verify that the refrigerant is R410A. If the wrong refrigerant is used, the unit may malfunction.
- Other than the specified refrigerant, do not let air or other gases enter the refrigeration circuit.
- If the refrigerant leaks during installation, make sure you fully ventilate the room.
- Use two wrenches when you install or dismantle the piping, a common wrench and a torque wrench. See Figure 4.1.

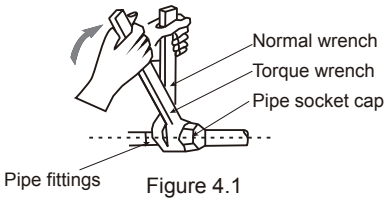

Figure 4.1

- Slot the refrigerant piping into the brass nut (accessory), and expand the pipe socket. Refer to the following table for the size of the pipe socket and the appropriate tightening torque.

External diameter (mm)	Tightening torque	Flared opening diameter (A)	Flared opening
Φ6.35	14.2-17.2N·m	8.3-8.7mm	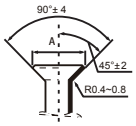 Figure 4.2
Φ9.53	32.7-39.9N·m	12-12.4mm	
Φ12.7	49.5-60.3N·m	15.4-15.8mm	
Φ15.9	61.8-75.4N·m	18.6-19mm	
Φ19.1	97.2-118.6N·m	22.9-23.3mm	

Caution

- Apply the appropriate tightening torque according to the installation conditions. Excessive torque will damage the socket cap, and the cap will not be tight if you apply insufficient torque, leading to leakages.

- Before the socket cap is installed on the pipe socket, apply some refrigerant oil on the socket (both inside and outside), and then rotate it three or four times before you tighten the cap. See Figure 4.3.

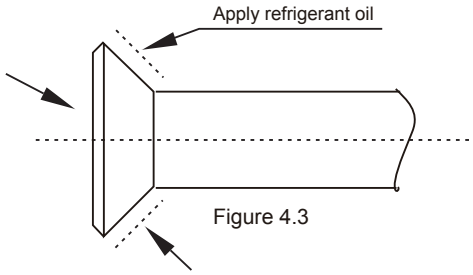

Figure 4.3

Precautions to take when welding the refrigerant pipes

- Before you weld the refrigerant pipes, fill the pipes with nitrogen first to discharge the air in the pipes. If no nitrogen is filled during welding, a large amount of oxide film will form inside the piping which may cause the air conditioning system to malfunction.
- Welding can be carried out on the refrigerant pipes when the nitrogen gas has been replaced or refilled.
- When the pipe is filled with nitrogen during welding, the nitrogen must be reduced to 0.02 MPa using the pressure release valve. See Figure 4.4.

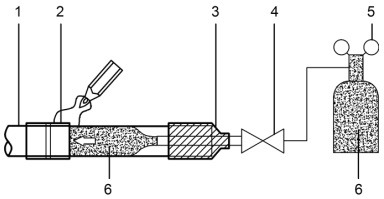

Figure 4.4

1	Copper piping
2	Section being brazed
3	Nitrogen connection
4	Hand valve
5	Pressure-reducing valve
6	Nitrogen

4.5 Air Tightness Test

Carry out the air tightness test on the system according to the instructions in the installation manual of the outdoor unit.

Caution

- The Air Tightness Test helps to ensure that the air and liquid cut-off valves of the outdoor unit are all closed (maintain the factory defaults).

4.6 Heat Insulation Treatment for Gas-Liquid Piping Connections for the Indoor Unit

- The heat insulation treatment is carried out on the piping at the gas and liquid sides of the indoor unit respectively.
  a. The piping on the gas side must use heat insulation material that can withstand temperatures of 120°C and more.
  b. For the piping connections of the indoor unit, use the insulation casing for copper pipes (accessory) to carry out the insulation treatment, and close all gaps.

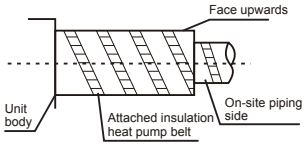

Figure 4.5

4.7 Vacuum

Create a vacuum in the system according to the instructions in the installation manual of the outdoor unit.

Caution

- For the vacuum, make sure that the air and liquid cut-off valves of the outdoor unit are all closed (maintain the factory status).

4.8 Refrigerant

Charge the system with refrigerant according to the instructions in the installation manual of the outdoor unit.

5. Water Discharge Piping Installation

5.1 Water Discharge Piping Installation for Indoor Unit

1. Use PVC pipes for the water discharge pipes. Based on the installation scenario, users can purchase the appropriate piping length from a sales agent, local after-sales service center, or local market. The piping length should be at least the same length as the body of the unit.
2. Insert the water discharge pipe into the end of the water suction connecting pipe of the unit body, and use the ring clamp (accessory) to clamp the water discharge pipes with the insulation casing for the water outlet piping securely.
3. Use the insulation casing for water discharge piping (accessory) to bundle the water suction and discharge pipes of the indoor unit (especially the indoor portion), and use the tie for the water discharge piping (accessory) to bind them firmly to make sure air does not enter and condense. See Figure 5.1

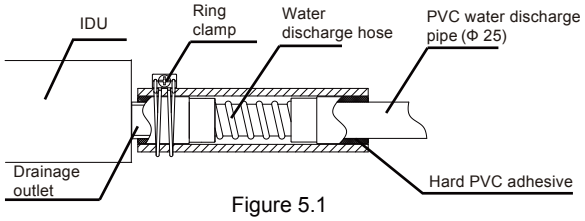

Figure 5.1

4. In order to prevent the back-flow of water into the interior of the air conditioner when the operation stops, the water discharge pipe should slope downwards towards the outside (drainage side) at a slope of more than 1/100. Make sure that the water discharge pipe does not swell or store water; otherwise, it will cause strange noises. See Figure 5.2.
5. When connecting the water discharge piping, do not use force to pull the pipes to prevent the water suction pipe connections from coming loose. At the same time, set a supporting point at every 0.8~1 m to prevent the water discharge pipes from bending. See Figure 5.2.

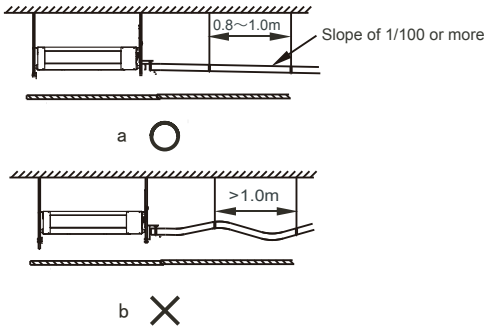

Figure 5.2

6. When connecting to a long water discharge pipe, the connections must be covered with the insulation casing to prevent the long pipe from coming loose.
7. Install the water discharge pipes as shown in Figure 5.3 or Figure 5.4. The water discharge piping outlet should not be higher than the water discharge height, ensuring a downward slope of more than 1/100.

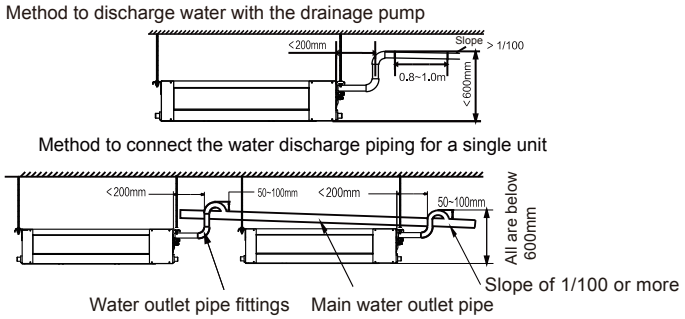

Water discharge pipes from multiple units are connected to the main water discharge pipe to be discharged through the sewage pipe.

Figure 5.3

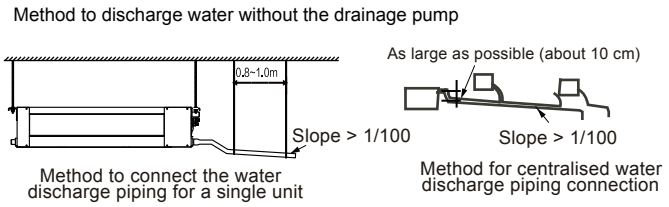

Figure 5.4

8. The end of the water discharge pipe must be more than 50 mm above the ground or from the base of the water discharge slot. Besides, do not put it in the water.

> ⚠ **Caution**
>
> - Make sure all the connections in the piping system are properly sealed to prevent water leakages.

5.2 Water Discharge Test

1. Before the test, make sure that the water discharge pipeline is smooth, and check that each connection is sealed properly. Conduct the water discharge test in the new room before the ceiling is paved.
2. Connect the power supply, and set the air conditioner to operate in the cool mode. Check the running sound of the drainage pump, as well as whether water is properly drained from the water discharge outlet.
3. Stop the air conditioner. Wait for three minutes, and then check if there is anything unusual. If the water discharge piping layout is not correct, the excessive water flow will cause the water level error and “EE” error code will be displayed on the display panel. There may even be water overflowing from the drain pan.
4. Open the test water cap, continue to add water (Figure 5.5 shows the water inlet) until the alarm for excessive water levels is triggered. Check if the drainage pump drains water immediately. After three minutes, if the water level does not fall below the warning level, the unit will shut down. At this time, you need to turn off the power supply, and drain away the accumulated water before you can turn on the unit normally.
5. Turn off the power supply, remove the water manually using the drainage plug, and put the test cap back to the original place.

> ⚠ **Caution**
>
> - The drainage plug at the bottom of the unit body is used to discharge accumulated water from the drain pan when the air conditioner malfunctions. When the air conditioner is operating normally, make sure the drainage plug is properly plugged to prevent water from leaking.

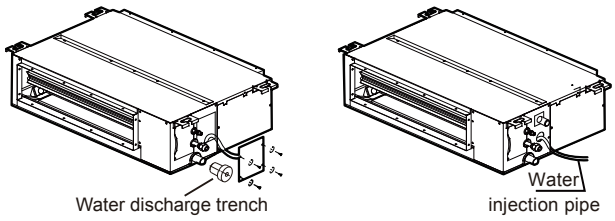

Figure 5.5

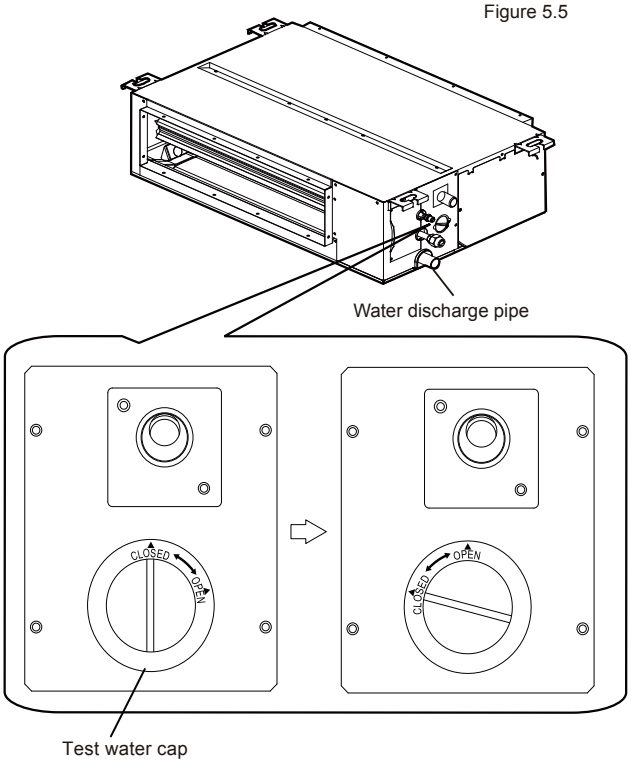

Figure 5.6

6. Air Duct Installation

6.1 Piping Design and Installation

1. In order to prevent short-circuit air delivery, the piping for air outlet and air inlet ducts must not be too close.
2. The indoor unit does not have an air filter installed. The air filter must be installed at a location like an air inlet where it can be easily maintained. (Without an air filter, dust particles may stick to the air heat exchanger which will make the air conditioner prone to failures and water leakage.)
3. Before installing the air duct, ensure that the static pressure of the air duct is within the permitted range of the indoor unit (Refer to the IDU technical manual). Figure 6.2 to Figure 6.10 show the static pressure curve for indoor units.
4. Connect the canvas duct to the air return and air outlet ducts to prevent vibrations from the indoor unit transferring to the ceiling.
5. Use heat insulation materials at a thickness of 25 mm or more to prevent condensation on the air duct.
6. Connect the air duct as shown in Figure 6.1. On-site preparation required for all components except for the air conditioner.

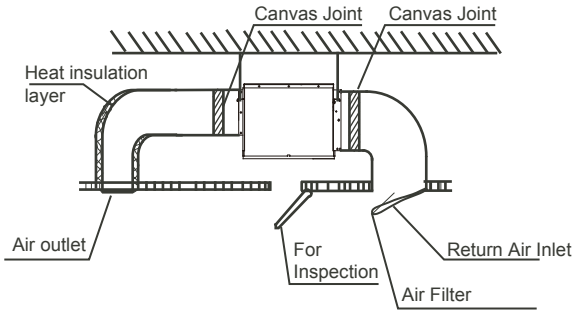

Note: This figure shows a duct unit with static pressure requirements.

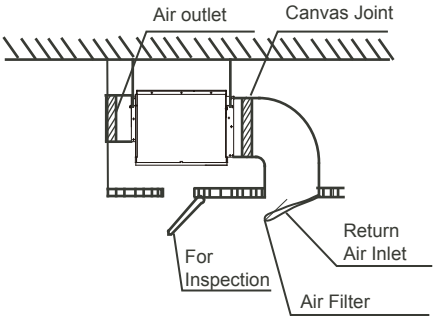

Note: This figure shows a duct unit without static pressure requirements.

Figure 6.1

> ⚠ **Caution**
>
> - Once the air conditioner body and the canvas joints are riveted together, the flange plate of right sizes must be secured with screws. (M6 x 12 screws are prepared on site.)

6.2 Fan performance

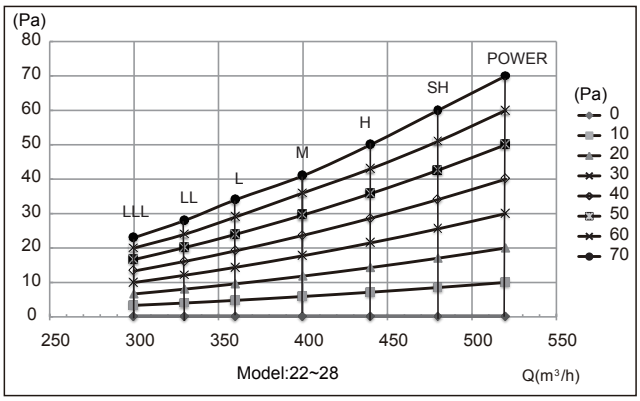

Fig.6-2

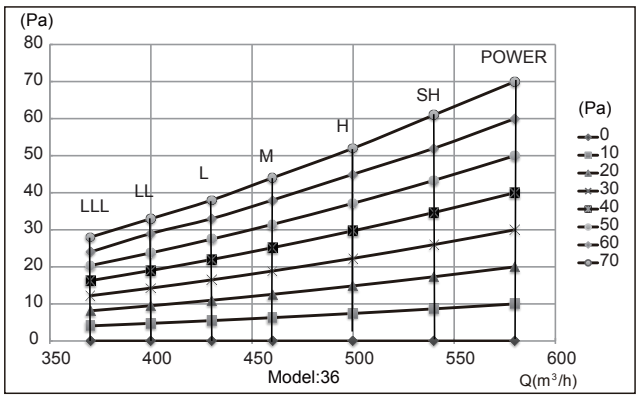

Fig.6-3

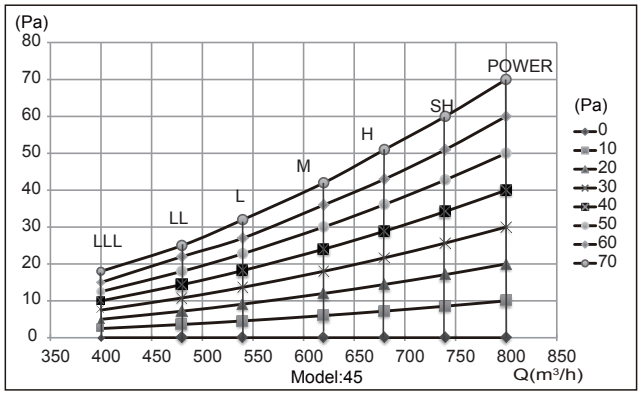

Fig.6-4

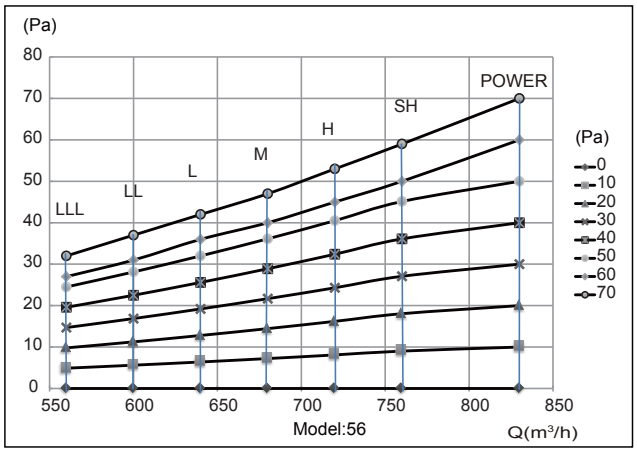

Fig.6-5

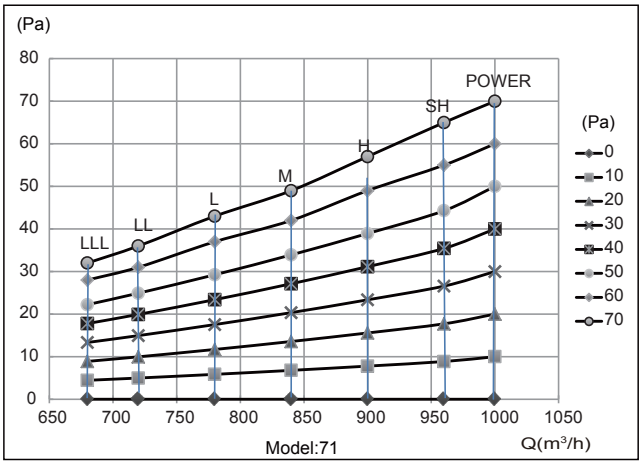

Fig.6-6

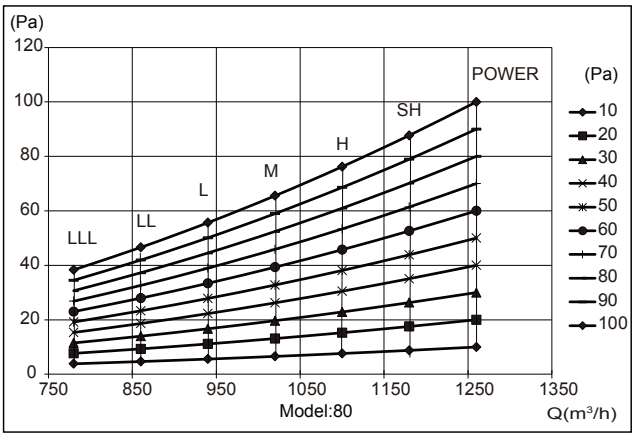

Fig.6-7

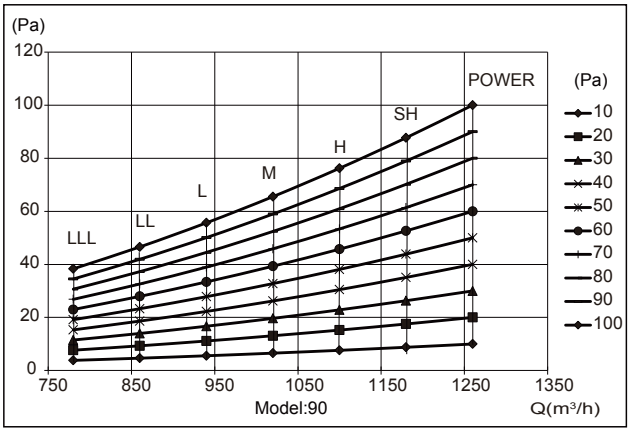

Fig.6-8

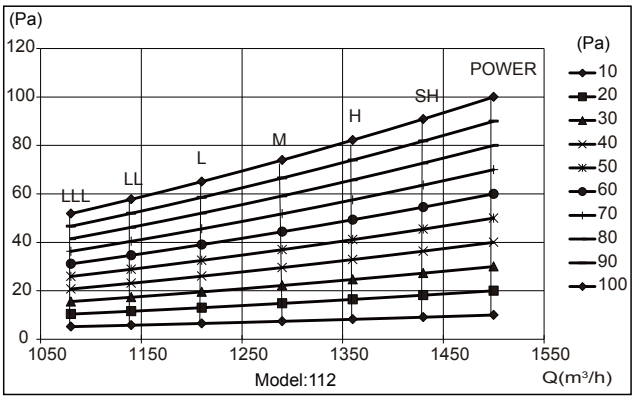

Fig.6-9

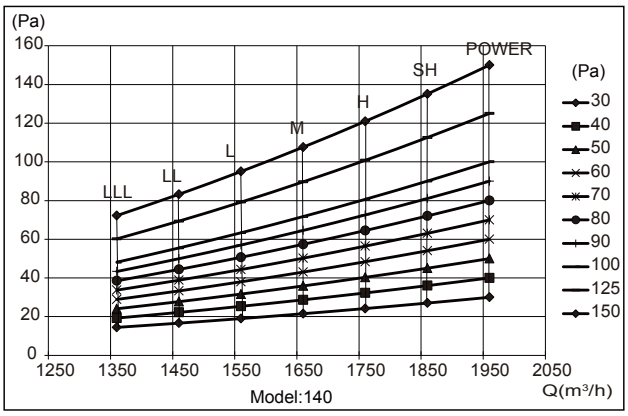

Fig.6-10

- Set proper external static pressure (ESP) according to the actual installation conditions. Otherwise it may cause some problems.
  - If the connecting duct is long and the ESP setting is small, the airflow will be very small, leading to poor performance.
  - If the connecting duct is short and the ESP setting is large, the airflow will be very large, leading to higher operating noise and even water may be blown out through the air outlet.

- ESP can be set through the DIP switch SW2 on the main board or the new wired controller. Please refer to Part “8.3 DIP switch settings on main board” for SW2 setting or the wired controller manual for wired controller setting.
  - Four ESP can be set through DIP switch SW2.

Capacity	ESP1	ESP2	ESP3	ESP4
2.2-7.1kW	10Pa	70Pa	30Pa	50Pa
8-11.2kW	20Pa	40Pa	70Pa	100Pa
14kW	40Pa	70Pa	100Pa	150Pa

  - Ten ESP can be set through the new wired controller.

Capacity	00	01	02	03	04	05	06	07	08	09
2.2-7.1kW	0Pa	10Pa	20Pa	30Pa	40Pa	50Pa	60Pa	70Pa	70Pa	70Pa
8-11.2kW	10Pa	20Pa	30Pa	40Pa	50Pa	60Pa	70Pa	80Pa	90Pa	100Pa
14kW	30Pa	40Pa	50Pa	60Pa	70Pa	80Pa	90Pa	100Pa	125Pa	150Pa

7. Electrical Wiring

Warning

- All the supplied parts, materials and electrical works must comply with local regulations.
- Use only copper wires.
- Use a dedicated power supply for the air-conditioners. The power voltage must be in line with the rated voltage.
- The electrical wiring works must be carried out by a professional technician, and must comply with the labels stated in the circuit diagram.
- Before the electrical connection works are carried out, turn off the power supply to prevent injuries caused by electric shock.
- The external power supply circuit of the air conditioner must include an earth line, and the earth line of the power cord connecting to the indoor unit must be securely connected to the earth line of the external power supply.
- Leakage protective devices must be configured according to the local technical standards and requirements for electrical and electronic devices.
- The fixed wiring connected must be equipped with an all-pole disconnection device with a minimum 3 mm contact separation.
- The distance between the power cord and signalling line must be at least 300 mm to prevent the occurrences of electrical interference, malfunction or damage to electrical components. At the same time, these line must not come in contact with the piping and valves.
- Choose electrical wiring that conforms to the corresponding electrical requirements.
- Connect to the power supply only after all the wiring and connection works have been completed, and carefully checked to be correct.

7.1 Power Cord Connection

- Use a dedicated power supply for the indoor unit that is different from the power supply for the outdoor unit.
- Use the same power supply, circuit breaker and leakage protective device for the indoor units connected to the same outdoor unit.

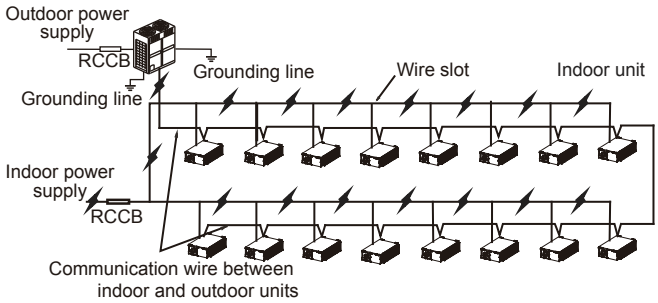

Figure 7.1

Figure 7.2 shows the power supply terminal of the indoor unit.

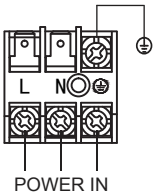

Figure 7.2

When connecting to the power supply terminal, use the circular wiring terminal with the insulation casing (see Figure 7.3).

Use power cord that conforms to the specifications and connect the power cord firmly. To prevent the cord from being pulled out by external force, make sure it is fixed securely.

If circular wiring terminal with the insulation casing can not be used, please make sure that:

- Do not connect two power cords with different diameters to the same power supply terminal (may cause overheating of wires due to loose wiring) (See Figure 7.4).

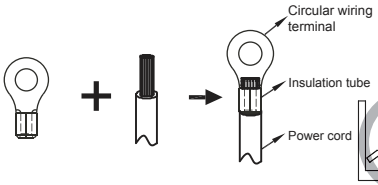

Figure 7.3

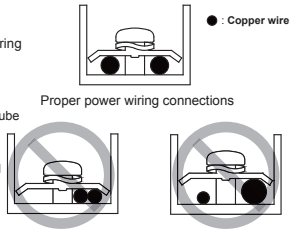

Figure 7.4

7.2 Electrical Wiring Specifications

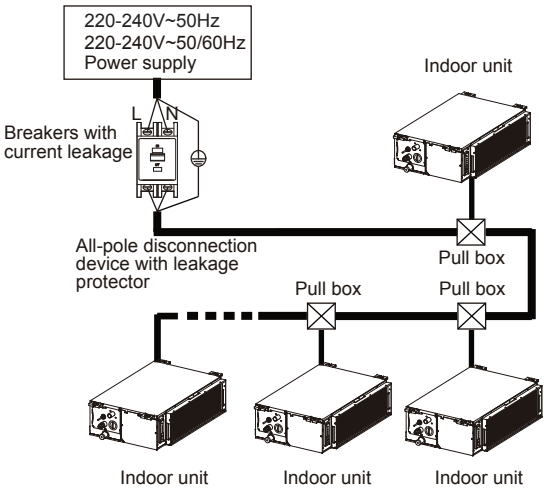

Figure 7.5

Refer to Tables 7.1 and 7.2 for the specifications of the power cord and communication wire. A wiring capacity that is too small will cause the electrical wiring to become too hot, and lead to accidents when the unit burns and becomes damaged.

Table 7.1

Model		2.2-14.0kW
Power supply	Phase	1-phase
	Volt and frequency	220-240V~50Hz 220-240V~50/60Hz
Communication wire between indoor and outdoor units		Shielded 3×AWG16-AWG18
Communication wire between indoor unit and wired controller *		Shielded AWG16-AWG20
Field fuses		15A

* Please refer to the corresponding wired controller manual for the wired controller wiring.

Table 7.2 Indoor units electrical characteristics

Capacity	Power supply				IFM	
	Hz	Volts	MCA	MFA	KW	FLA
2.2kW	50 50/60	220-240	0.74	15	0.03	0.59
2.8kW			0.74	15	0.03	0.59
3.6kW			0.77	15	0.03	0.62
4.5kW			1	15	0.03	0.8
5.6kW			1	15	0.03	0.8
7.1kW			1.1	15	0.06	0.88
8.0kW			1.3	15	0.15	1.04
9.0kW			1.3	15	0.15	1.04
11.2kW			1.5	15	0.15	1.2
14.0kW			2.6	15	0.24	2.08

Abbreviations:
MCA: Minimum Circuit Amps
MFA: Maximum Fuse Amps
IFM: Indoor Fan Motor
kW: Rated motor output
FLA: Full Load Amps

Warning

Refer to local laws and regulations when deciding on the dimensions for the power cords and wiring. Get a professional to select and install the wiring.

7.3 Communication Wiring

- Use only shielded wires for the communication wiring. Any other type of wires may produce a signal interference that will cause the units to malfunction.
- Do not carry out electrical works like welding with the power on.
- All shielded wiring in the network are interconnected, and will eventually connect to earth at the same point " ⏚ ".
- Do not bind the refrigerant piping, power cords and communication wiring together. When the power cord and communication wiring are parallel, the distance between the two lines must be 300 mm or more in order to prevent signal source interference.
- Communication wiring must not form a closed loop.

7.3.1 Communication wiring between the indoor and outdoor units

- The indoor and outdoor units communicate via the RS485 serial port.
- The communication wiring between the indoor and outdoor units should be connected one unit after another in a daisy chain from the outdoor unit to the final indoor unit.And the shielded layer must be properly grounded, and a build-out resistor must be added to the last indoor unit to enhance the stability of the communication system (see Figure 7.6).
- Incorrect wiring such as a star connection or a closed ring will cause instability of the communication system and system control anomalies.
- Use a three core shielded wire (greater than or equal to 0.75 mm^2) for the communication wiring between the indoor and outdoor units. Make sure the wiring is connected correctly. The connecting lead for this communication wire must come from the master outdoor unit.

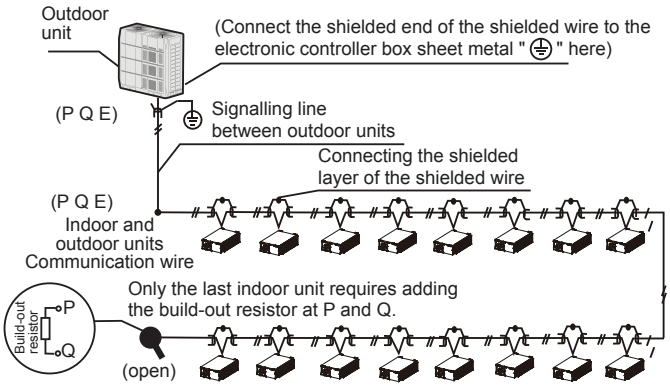

Figure 7.6

7.3.2 Communication wiring between the indoor unit and wired controller

The wired controller and the indoor unit can be connected in different manners, depending on the forms of communication.

1. For a bidirectional communication mode:
   - Use 1 wired controller to control 1 indoor unit or 2 wired controllers (one master and one slave controller) to control 1 indoor unit (see Figure 7.7);
   - Use 1 wired controller to control multiple indoor units or 2 wired controllers (one master and one slave controller) to control multiple indoor units (see Figure 7.8);

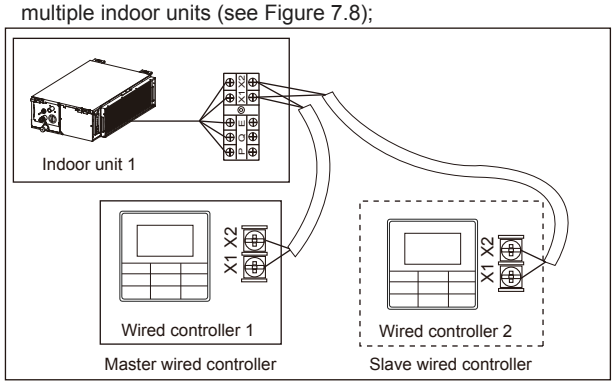

Figure 7.7

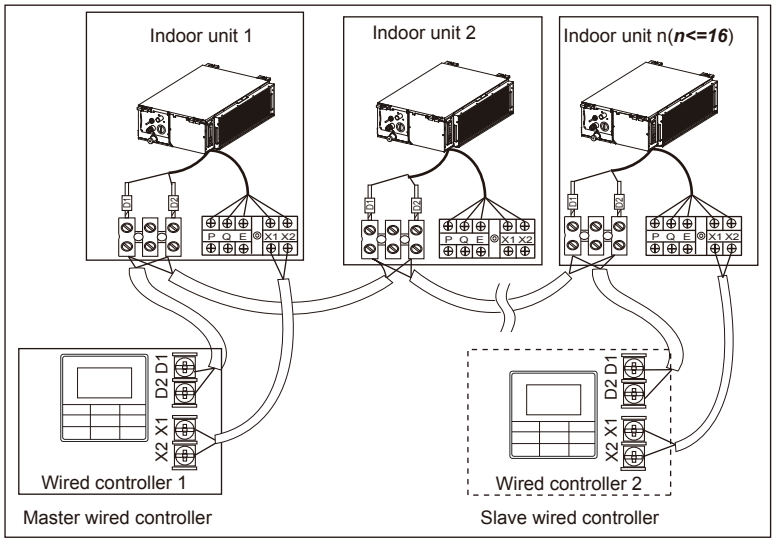

Figure 7.8

2. For a unidirectional communication mode:
   - Use 1 wired controller to control 1 indoor unit (see Figure 7.9).

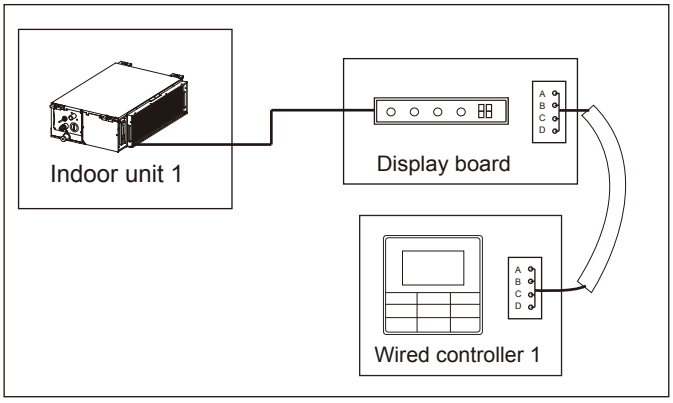

Figure 7.9

- The X1/X2, D1/D2 ports on the sides of the main control board and the unidirectional communication port (display board side) are for different types of wired controllers (see Figure 7.10).
- Use the connecting wires (accessory 8) to connect the D1/D2 ports.

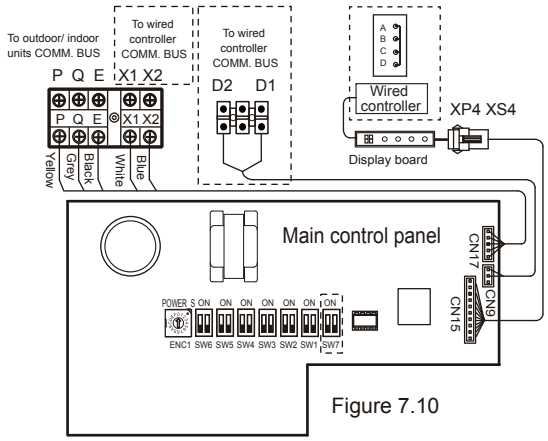

Figure 7.10

> ⚠ Caution
> - For the specific connection method, refer to the instructions in the corresponding wired controller manual to carry out the wiring and connections.

7.4 Handling the Electrical Wiring Connection Points

- Once the wiring and connections are done, use tie straps to secure the wiring properly so that the connection joint cannot be pulled apart by external force. The connection wiring must be straight out so that the cover of the electrical box is level and can be closed tightly.
- Use professional insulation and sealing materials to seal and protect the perforated wires. Poor sealing may lead to condensation, and entry of small animals and insects that may cause short circuits in parts of the electrical system, causing the system to fail.

8. On-site Configuration

8.1 Capacity Settings

Set up the PCB board DIP switch on the indoor electric control box to cater to different uses. Once the settings are done, make sure you cut off the main power switch again, and then switch the power on. If the power is not cut off and switched on again, the settings will not be executed.

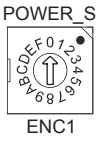

ENC1 Settings for Capacity DIP Switch:

DIP Switch Code	Capacity
0	2200W
1	2800W
2	3600W
3	4500W
4	5600W
5	7100W
6	8000W
7	9000W
9	11200W
B	14000W

Caution

- The capacity DIP switches have been configured before delivery. Only a professional maintenance personnel should change these settings.

8.2 Address Settings

When this indoor unit is connected to the outdoor unit, the outdoor unit will automatically allocate the address to the indoor unit. Alternatively, you may use the controller to manually set the address.

- The addresses of any two indoor units in the same system cann't be the same.
- The network address and the indoor unit address are the same, and does not have to be configured separately.
- Once the address settings are completed, mark the address of each indoor unit to facilitate after-sales maintenance.
- The centralized control of the indoor unit is completed on the outdoor unit. For details, refer to the manual on the outdoor unit.

Caution

- Once the centralized control function for the indoor unit has been completed on the outdoor unit, the DIP switch on main control panel of the outdoor unit must be set to auto addressing; otherwise, the indoor unit in the system are not controlled by the centralized controller.
- The system can connect up to 64 indoor units (address 0~63) at the same time. Each indoor unit can only have one address DIP switch in the system. The addresses of any two indoor units in the same system cann't be the same. Units that have the same address may malfunction.

8.3 DIP Switch Settings on Main Board

0/1 definition of each dial code switch:	
ON 1 means 0	ON 1 means 1

SW1_1	
SW1 [0] ON 1 2	Cooling mode temperature compensation is 0°C
SW1 [1] ON 1 2	Cooling mode temperature compensation is 2°C
SW1_2	
SW1 [0] ON 1 2	EEV at position 96 (steps) in standby in heating mode
SW1 [1] ON 1 2	EEV at position 72 (steps) in standby in heating mode

SW2	
SW2 [00] ON 1 2	External static pressure 1
SW2 [01] ON 1 2	External static pressure 2
SW2 [10] ON 1 2	External static pressure 3
SW2 [11] ON 1 2	External static pressure 4

Note:

Capacity	ESP1	ESP2	ESP3	ESP4
2.2-7.1kW	10Pa	70Pa	30Pa	50Pa
8-11.2kW	20Pa	40Pa	70Pa	100Pa
14kW	40Pa	70Pa	100Pa	150Pa

SW3_1	
SW3 [0] ON 1 2	Reserved
SW3 [1] ON 1 2	Clear indoor unit address
SW3_2	
SW3 [0] ON 1 2	Reserved

SW4	
SW4 [00] ON 1 2	In heating mode when the set temperature has been reached, the fan operates in a 4 minutes off / 1 minute on repeating cycle
SW4 [01] ON 1 2	In heating mode when the set temperature has been reached, the fan operates in an 8 minutes off / 1 minute on repeating cycle
SW4 [10] ON 1 2	In heating mode when the set temperature has been reached, the fan operates in a 12 minutes off / 1 minute on repeating cycle
SW4 [11] ON 1 2	In heating mode when the set temperature has been reached, the fan operates in a 16 minutes off / 1 minute on repeating cycle

SW5	
SW5 [00] ON 1 2	In heating mode fan does not run when indoor heat exchanger mid-point temperature is 15°C or below
SW5 [01] ON 1 2	In heating mode fan does not run when indoor heat exchanger mid-point temperature is 20°C or below
SW5 [10] ON 1 2	In heating mode fan does not run when indoor heat exchanger mid-point temperature is 24°C or below
SW5 [11] ON 1 2	In heating mode fan does not run when indoor heat exchanger mid-point temperature is 26°C or below

SW6	
SW6 [00] ON 1 2	Heating mode temperature compensation is 6°C
SW6 [01] ON 1 2	Heating mode temperature compensation is 2°C
SW6 [10] ON 1 2	Heating mode temperature compensation is 4°C
SW6 [11] ON 1 2	Heating mode temperature compensation is 0°C (use follow me function)

SW7: reserved

J1	
J1	Auto restart function enabled
J1	Auto restart function disabled

> **Caution**
>
> - All DIP switches (including the capacity DIP switch) have been configured before delivery. Only a professional maintenance personnel should change these settings.
> - Improper DIP switch settings may cause condensation, noise, or unexpected system malfunction.
> - The default DIP switch setting is based on the actual unit.

8.4 Error Codes and Definitions

Error code	Content
E0	Mode conflict
E1	Communication error between indoor and outdoor units
E2	Indoor ambient temperature sensor (T1) error
E3	Indoor heat exchanger mid-point temperature sensor(T2) error
E4	Indoor heat exchanger outlet temperature sensor (T2B) error
E6	Fan error
E7	EEPROM error
Eb	Indoor EEV coil error
Ed	Outdoor unit error
EE	Water level error
FE	Indoor unit has not been assigned an address

8.5 Installation guide for the display board

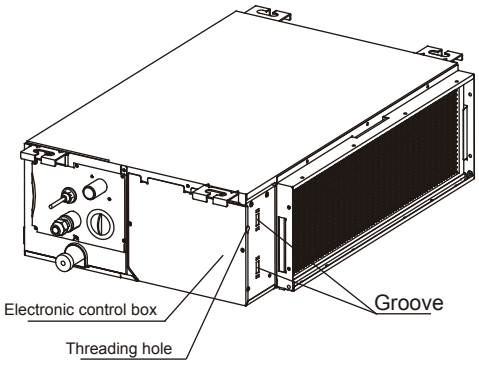

Figure 8.1: Electronic control box

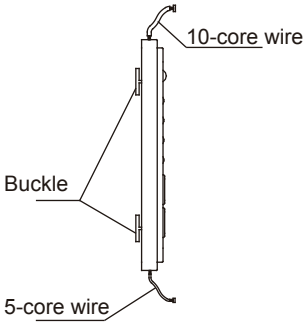

Figure 8.2: Display board

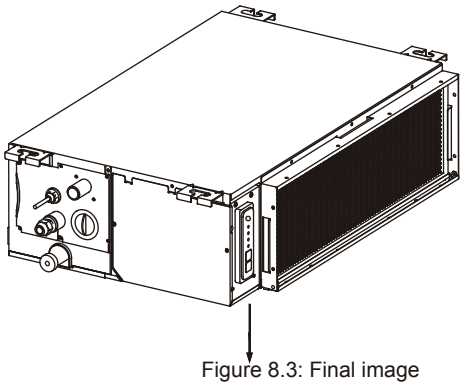
Figure 8.3: Final image

1. Put the buckles of the display board into the grooves of electric control box and push the display board down;
2. Connect the 10-core wire of the display board to the control board assembly through the threading hole on the electric control box;
3. Connect the 5-core wire of the display board to the wired controller.

9. Test Run

9.1. Things to Note before Test Run

1. Indoor and outdoor units are properly installed;
2. Piping and wiring are correct;
3. No leakage from the refrigerant piping system;
4. Water discharge is smooth;
5. Insulation is complete;
6. Grounding line has been properly connected;
7. Piping length, and amount of refrigerant filled have been recorded;
8. The voltage of the power supply is the same as the rated voltage of the air conditioner;
9. No obstacles at the air inlet and outlet of the indoor and outdoor units;
10. Cut-off valves for the gas and liquid ends are opened;
11. Connect to the power supply to let the air conditioner warm up first.

> **Note**
>
> Once the power is connected, when the unit is turned on or started immediately after the unit is turned off, the air conditioner has a protective function which delays the start of the compressor by 3 minutes.

9.2. Test Run

Use the wired/remote controller to control the cooling operating mode in the air conditioner, and refer to the manual to check the following items one by one.
If there is any fault, troubleshoot by referring to the section on "Air Conditioner Errors and Causes" in the manual.

9.2.1 Indoor unit

1. Wired/remote controller switch is operating normally;
2. Function keys of the wired/remote controller are operating normally;
3. Room temperature regulation is normal;
4. LED indicator is on;
5. Key for manual operation is normal;
6. Water discharge is normal;
7. No vibration and strange sounds during operation;

9.2.2 Outdoor unit

1. No vibration and strange sounds during operation;
2. If the wind, noise and condensation affect the neighbours;
3. Any refrigerant leakage.

There are two types of precautions as described below:

⚠ Warning: Failure to comply may lead to death or serious injury.

⚠ Caution: Failure to comply may lead to injury or damage of the unit. Depending on the situation, this may also lead to serious injury.

Once the installation is completed, please keep the manual properly for future reference. When this air conditioner is handed over to other users, make sure that the manual is included with the handover.

⚠ Warning

- Do not use this unit in locations where flammable gas may exist. If flammable gas comes into contact with the unit, a fire may occur, which could result in serious injury or death.
- If this unit exhibits any abnormal behavior (such as emitting smoke) there is a danger of serious injury. Disconnect the power supply and contact your supplier or service engineer immediately.
- The refrigerant in this unit is safe and should not leak if the system is designed and installed properly. However, if a large amount of refrigerant leaks into a room, the oxygen concentration will decrease rapidly, which can cause serious injury or death. The refrigerant used in this unit is heavier than air, so the danger is greater in basements or other underground spaces. In the event of a refrigerant leak, turn off any devices that produce a naked flame and any heating devices, ventilate the room, and contact your supplier or service engineer immediately.
- Toxic fumes may be produced if the refrigerant in this unit comes into contact with naked flames (such as from a heater, gas stove/burners, or electric appliances).
- If this unit is used in the same room as a cooker, stove, hob, or burner, ventilation for sufficient fresh air must be ensured, otherwise the oxygen concentration will fall, which may cause injury.
- Dispose of this unit’s packaging carefully, so children cann’t play with it. Packaging, especially plastic packaging, can be dangerous, can cause serious injury or death. Screws, staples and other metal packaging components can be sharp and should be disposed of carefully to avoid injury.
- Do not attempt to inspect or repair this unit yourself. This unit should only be serviced and maintained by a professional air conditioning service engineer. Incorrect servicing or maintenance can cause electric shocks, fire or water leaks.
- This unit should only be re-positioned or re-installed by a professional technician. Incorrect installation can lead to electric shocks, fire or water leaks. The installation and grounding of electrical appliances should only be carried out by licensed professionals. Ask your supplier or installation engineer for further information.
- Do not allow this unit or its remote controller to come into contact with water, as this can lead to electric shocks or fire.
- Turn off the unit before cleaning it to avoid electric shocks. Otherwise, an electric shock and injury may result.
- To avoid electric shocks and fires, install an earth leakage detector.
- Do not use paint, varnish, hair spray, other flammable sprays or other liquids that may give off flammable fumes/vapor near this unit, as doing so can cause fires.
- When replacing a fuse, ensure that the new fuse to be installed completely complies with requirements.
- Do not open or remove the unit's panel when the unit is powered on. Touching the unit's internal components while the unit is powered on can lead to electric shocks or injuries caused by moving parts such as the unit's fan.
- Ensure that the power supply is disconnected before any servicing or maintenance is carried out.
- Do not touch the unit or its remote controller with wet hands, as doing so can lead to electric shocks.
- Do not allow children to play near this unit, as doing so risks injury.
- Do not insert your fingers or other objects into the unit’s air inlet or air outlet to avoid injury or damage to the equipment.
- Do not spray any liquids onto the unit or allow any liquids to drip onto the unit.
- Do not place vases or other liquid containers on the unit or in places where liquid could drip onto it. Water or other liquids that come into contact with the unit can lead to electric shocks or fires.
- Do not remove the remote controller’s front or back overs and do not touch the remote controller’s internal components, as doing so can cause injury. If the remote controller stops working, contact your supplier or service engineer.
- Ensure that the unit is properly grounded, otherwise electric shocks or a fire may result. Electrical surges (such as those that can be caused by lightning) can damage electrical equipment. Ensure that suitable surge protectors and circuit breakers are properly installed, otherwise electric shocks or a fire may result.
- Dispose of this unit properly and in accordance with regulations. If electrical appliances are disposed of in landfills or dumps, hazardous substances can leak into the groundwater and thus enter the food chain.
- Do not use the unit until the qualified technician instructs you that it is safe to do so.
- Do not place appliances that produce naked flames in the path of the airflow from the unit. The airflow from the unit may increase the rate of combustion, which may cause a fire and cause serious injury or death. Alternatively, the airflow may cause incomplete combustion which can lead to reduced oxygen concentration in the room, which can cause serious injury or death.

⚠ Caution

- Only use the air conditioner for its intended purpose. This unit should not be used to provide refrigeration or cooling for food, plants, animals, machinery, equipment or art.
- Do not insert your fingers or other objects into the unit’s air inlet or air outlet to avoid injury or damage to the equipment.
- The fins on the unit’s heat exchanger are sharp and can cause injury if touched. To prevent injury, when the unit is being serviced, gloves should be worn or the heat exchanger should be covered.
- Do not place items which might be damaged by moisture under the unit. When the humidity is greater than 80% or if the drain pipe is blocked or the air filter is dirty, water could drip from the unit and damage objects placed under the unit.
- Ensure that the drain pipe functions properly. If the drain pipe is blocked by dirt or dust, water leaks may occur when the unit is running in cooling mode. If this happens, turn the unit off and contact your supplier or service engineer.
- Do not touch the internal parts of the controller. Do not remove the front panel. Some internal parts may cause injury or be damaged.
- Ensure that children, plants and animals are not directly exposed to the airflow from the unit.
- When fumigating a room with insecticide or other chemicals, cover the unit well and do not run it. Failure to observe this caution could lead to chemicals getting deposited inside the unit and later emitted from the unit when it running, endangering the health of any room occupants.
- Do not dispose of this product as unsorted waste. It must be separately collected and processed. Ensure that all applicable legislation regarding the disposal of refrigerant, oil and other materials is adhered to. Contact your local waste disposal authorty for information about disposal procedures.

- To avoid damaging the remote controller, exercise caution when using it and replacing its batteries. Do not place objects on top of it.
- Do not place appliances that have naked flames under or near the unit, as heat from the appliance can damage the unit.
- Do not place the unit's remote controller in direct sunlight. Direct sunlight can damage the remote controller's display.
- Do not use strong chemical cleaners to clean the unit, as doing so can damage the unit's display or other surfaces. If the unit is dirty or dusty, use a slightly damp cloth with very diluted and mild detergent to wipe the unit. Then, dry it with a dry cloth.
- Children shall not play with the appliance.

- Do not dispose of this product as unsorted waste. It must be separately collected and processed. Ensure that all applicable legislation regarding the disposal of refrigerant, oil and other materials is adhered to. Contact your local waste disposal authority for information about disposal procedures.

- This appliance is not intended for use by persons (including children) with reduced physical, sensory or mental capabilities, or lack of experience and knowledge, unless they have been given supervision or instruction concerning use of the appliance by a person responsible for their safety. Children should be supervised to ensure that they do not play with the appliance.
- This appliance can be used by children aged from 8 years and above and persons with reduced physical, sensory or mental capabilities or lack of experience and knowledge if they have been given supervision or instruction concerning use of the appliance in a safe way and understand the hazards involved. Children shall not play with the appliance. Cleaning and user maintenance shall not be made by children without supervision.

10. Part Names

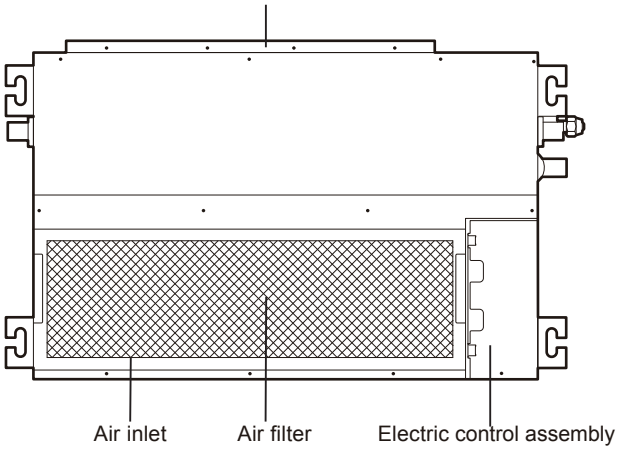

Figure 10.1

The figure shown above is for reference only and may be slightly different from the actual product.

11. The Explain Of The Display Panel

The display panel has one type and the appearance of the type is shown in Figure 11 .1.

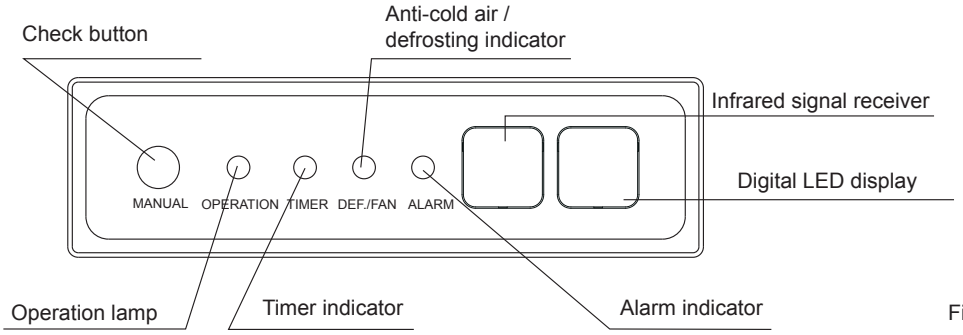

Figure 11.1

Table: Display panel output under normal operating conditions.

Unit state		Display output	
		Digital display panels	
		Unit state	Digital display
Standby		Operation indicator flashes slowly	--
Shutting-down		All indicators off	--
Operation	Normal operation	Operation indicator on	Cooling and heating modes: set temperature Fan only mode: indoor ambient temperature
	Cold draft prevention or outdoor unit defrosting operation	Operation and Anti-cold / defrosting indicators on	Set temperature
A timer has been set		Timer indicator on	

12. Air Conditioner Operations and Performance

The operating temperature range under which the unit runs stably are given in below table.

Mode	Indoor temperature
Cooling	17-32°C If the indoor humidity is above 80%, condensation may form on the surface of the unit.
Heating	≤27°C

Caution

- The unit performs stably in the temperature range given in above table. If the indoor temperature is outside the unit's normal operating range, it may stop running and display an error code.

To ensure the desired temperature is achieved efficiently, ensure that:

- All windows and door are closed.
- The airflow direction is adjusted to work in running mode.
  The air filter is clean.

Please note how you can best save energy and achieve the best cooling/heating effect.

- Regularly clean air filters inside indoor units.

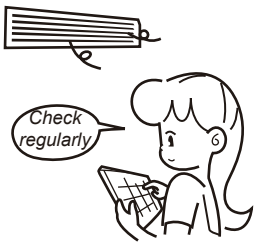

Figure 12.1

- Avoid too much outdoor air coming into air-conditioned spaces.

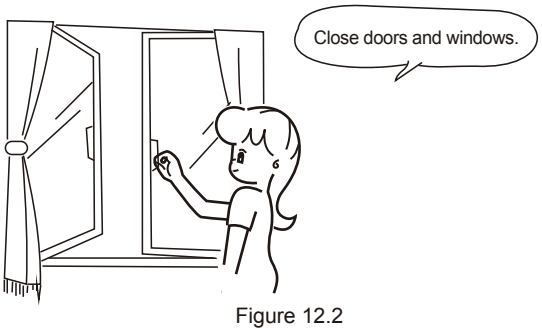

Figure 12.2

- Note that outlet air is cooler or heater than set room temperature. Avoid direct exposure to outlet air as it may be too cool or hot.

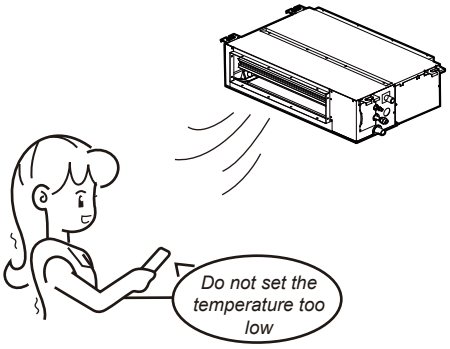

Figure 12.3

- Maintain a proper air distribution.Air outlet louvers should be used to adjust the direction of outlet airflow, as doing so might ensure more efficient operation.

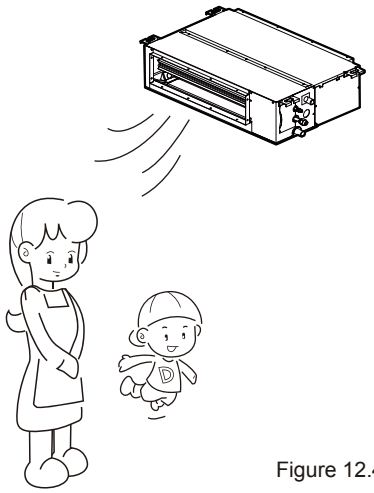

Figure 12.4

13. Adjusting Air Flow Direction

Since warmer air rises and cooler air falls, the distribution of warmed/cooled air around a room can be improved by positioning the unit's louvers. The louver angle can be adjusted by pressing the [SWING] button on the remote controller.

Caution

- During heating operation, horizontal airflow will aggravate the uneven distribution of room temperature.
- The louver direction: horizontal airflow is recommended during cooling operation. Note the downward air flow will cause condensation on the air outlet and louver surface.

■ Duct type

Use the following method to regulate the air outlet assembly (sold separately).

1. Running in cooling Mode
In order to achieve the cooling effect at all parts of the room, adjust the fan guide slider to the horizontal air outlet state.

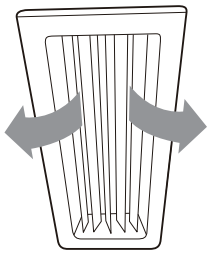

Figure 13.1

2. Running in heating mode
In order to achieve the heating effect at the ground level of the room, adjust the fan guide slider to the downwards air outlet state.

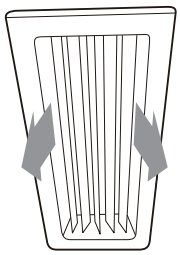

Figure 13.2

14. Maintenance

> ⚠ Caution
>
> - Please release pressure before disassembly.
> - Before you clean the air conditioner, ensure it is powered off.
> - Check that the wiring is undamaged and connected.
> - Use a dry cloth to wipe the indoor unit and remote controller.
> - A wet cloth may be used to clean the indoor unit if it is very dirty.
> - Never use a damp cloth on the remote controller.
> - Do not use a chemically treated duster on the unit or leave this type of material on the unit to avoid damaging the finish.
> - Do not use benzene, thinner, polishing powder, or similar solvents for cleaning. These may cause the plastic surface to crack or warp.

- **Method for cleaning the air filter**
  a. The air filter can prevent the dust or other particles from entering the unit. If the filter is blocked, the unit will not work well. Clean the filter every two weeks when you use it regularly.
  b. If the air conditioner is positioned in a dusty place, clean the filter often.
  c. Replace the filter if it is too dusty to clean (the replaceable air filter is an optional fitting).

1. Open the air return plenum, remove the two screws of the filter frame, and pull the filter out.

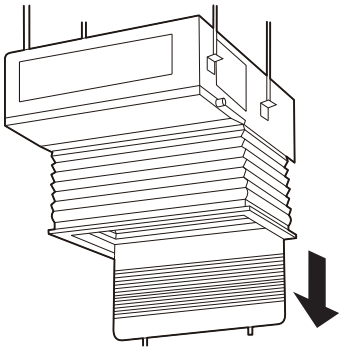

Figure 14.1

2. Dismantle the air filter.
3. Clean the air filter

- Dusts will accumulate on the filter along with the unit operation, and need to be removed from the filter, or the unit would not function effectively.
- Clean the filter every two weeks when you use the unit regularly.
- Clean the air filter with a vacuum cleaner or water.
  a. The air intake side should face up when using a vacuum cleaner. (Refer to Figure 14.2)
  b. The air intake side should face down when using clean water. (Refer to Figure 14.3)
- For excessive dusts, use a soft brush and natural detergent to clean it and dry in a cool place.

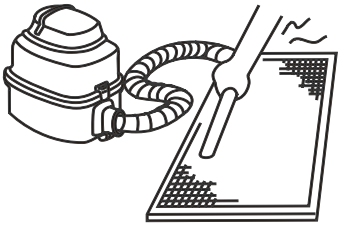

Figure 14.2

Figure 14.3

> ⚠ Caution
>
> - Do not dry out the air filter under direct sunshine or with fire.
> - The air filter should be installed before the unit body installation.

4. Re-install the air filter.

- **Maintenance before stopping using the unit for a long time (e.g., at the end of a season)**
  a. Let the indoor units run in fan only mode for about half a day to dry the interior of the unit.
  b. Clean the air filter and indoor unit casing.
  c. Refer to “Cleaning the air filter" for details. Install cleaned air filters back in their original positions.
  d. Turn off the unit with the ON/OFF button on the remote controller, and then unplug it.

> ⚠ Caution
>
> - When the power switch is connected, some energy will be consumed even if the unit is not running. Disconnect the power to save energy.
> - A degree of dirt will accumulate when the unit has been used several times, which will require cleaning.
> - Take off the batteries from the remote controller.

- **Maintenance after a long period of non-use**
  a. Check for and remove anything that might be blocking the inlet and outlet vents of the indoor units and outdoor units.
  b. Clean the unit casing and clean the filter. Refer to [Cleaning the filter] and "Cleaning the filter" for instructions. Re-install the filter before running the unit.
  c. Turn on the power at least 12 hours before you want to use the unit to ensure it works properly. As soon as the power is turned on, the remote control display appears.

15. Symptoms That Are Not Faults

The following symptoms may be experienced during the normal operation of the unit and are not considered faults. Note: If you are not sure whether a fault has occurred, contact your supplier or service engineer immediately.

Symptom 1: The unit will not run

- Symptom: When the ON/OFF button on the remote controller is pressed, the unit does not immediately start running.

  Cause: to protect certain system components, system start-up or re-start is intentionally delayed for up to 12 minutes under some operating conditions. If the OPERATION LED on the unit's panel is lighting, the system is working normally and the unit will start after the intentional delay is complete.

- Heating mode is running when the following panel lights are on: operation and the "DEF./FAN LED indicator.

  Cause: the indoor unit activates protective measures because of the low outlet temperature.

Symptom 2: The unit emits white mist

- White mist is generated and emitted when the unit starts to operate in a very humid environment. This phenomenon will stop once the humidity in the room is reduced to normal levels.
- The unit occasionally emits white mist when it runs in heating mode. This occurs when the system finishes periodic defrosting. Moisture that may accumulate on the unit's heat exchanger coil during defrosting becomes mist and is emitted from the unit.

Symptom 3: Dust is emitted from the unit

- This can occur when the unit first runs after a long idle period.

Symptom 4: The unit gives off a strange odor

- If smells such as those of strong-smelling food or tobacco smoke are present in the room, they can enter the unit, leave trace deposits on the unit's internal components, and later be emitted from the unit.

16. Troubleshooting

16.1 General

- Sections 16.2 and 16.3 describe some initial troubleshooting steps that can be taken when an error occurs. If these steps do not resolve the issue, arrange for a professional technician to investigate the problem. Do not attempt further investigations or troubleshooting yourself.
- If any of the following errors occur, power the unit off, contact a professional technician immediately and do not attempt troubleshooting yourself:
  a. A safety device such as a fuse or circuit breaker frequently blows/trips.
  b. An object or water enters the unit.
  c. Water is leaking from the unit.

> ⚠ Caution
>
> - Do not attempt to inspect or repair this unit by yourself. Arrange for a qualified technician to carry out all servicing and maintenance.

16.2 Unit Troubleshooting

Symptom	Possible causes	Troubleshooting steps
The unit does not start	A power cut has occurred (the power to the premises has been cut-off).	Wait for the power to come back on.
	The unit is powered off.	Power on the unit. This indoor unit forms part of an air conditioning system that has multiple indoor units that are all connected. The indoor units cann't be powered on individually - they are all connected to one, single power switch. Ask a professional technician for advice regarding how to safely power on the units.
	The power switch fuse may have burned out.	Replace the fuse.
	The remote controller's batteries are dead.	Replace the batteries.
Air flows normally but doesn't cool	The temperature setting is not correct.	Set the desired temperature on the remote controller.
The unit starts or stops frequently	Arrange for a professional technician to check the following: • Too much or too little refrigerant. • No gas in the refrigerant circuit. • The outdoor unit compressors have malfunctioned. • The power supply voltage is too high or too low. • There is a blockage in the piping system.	
Low cooling effect	Doors or windows are open.	Close the doors and windows.
	Sunlight is shining directly onto the unit.	Close shutters/blinds to shield the unit from direct sunlight.
	The room contains many heat sources such as computers or refrigerators.	Turn off some of the computers during the hottest part of the day.
	The unit's air filter is dirty.	Clean the filter.
	The outside temperature is unusually high.	The cooling capacity of the system reduces as the outdoor temperature rises and the system may not provide sufficient cooling if the local climate conditions are not considered when the system's outdoor units were selected.
	Engage a professional air conditioning engineer to check the following: • The unit's heat exchanger is dirty. • The unit's air inlet or outlet is blocked. • A refrigerant leak has occurred.	
Low heating effect	Doors or windows are not completely closed.	Close doors and windows.
	Arrange for a professional technician to check the following: A refrigerant leak has occurred.	

16.3 Remote Controller Troubleshooting

Warning:

Certain troubleshooting steps that a professional technician may perform when investigating an error are described in this owner's manual for reference only. Do not attempt to undertake these steps yourself – arrange for a professional technician to investigate the problem.

If any of the following errors occur, power the unit off and contact a professional technician immediately. Do not attempt troubleshooting yourself:

- A safety device such as a fuse or circuit breaker frequently blows/trips.
- An object or water enters the unit.
- Water is leaking from the unit.

Symptom	Possible causes	Troubleshooting steps
The fan speed can not be adjusted	Check whether the MODE indicated on the display is "AUTO".	In automatic mode, the air conditioner will automatically change the fan's speed.
	Check whether the MODE indicated on the display is "DRY".	When dry mode is selected, the air conditioner automatically adjusts the fan speed. (The fan speed can be selected during "COOL", "FAN ONLY", and "HEAT".)
The remote controller signal is not transmitted even when the ON/OFF button is pushed	A power cut has occurred (the power to the premises has been cut-off).	Wait for the power to come back on.
	The remote controller's batteries are dead	Replace the batteries.
The indication on the display disappears after a certain time	Check whether the timer operation has come to an end when TIMER OFF is indicated on the display.	The air conditioner operation will stop up to the set time.
The TIMER ON indicator goes off after a certain time	Check whether the timer operation has come to an end when TIMER ON is indicated on the display.	Up to the set time, the air conditioner will automatically start and the appropriate indicator will go off.
No receiving sound from the indoor unit when the ON/OFF button is pressed	Check whether the signal transmitter of the remote controller is properly directed to the infrared signal receiver of the indoor unit when the ON/OFF button is pressed.	Directly transmit the signal transmitter of the remote controller to the infrared signal receiver of the indoor unit, and then press the ON/OFF button twice.

16.4 Error Codes

With the exception of a mode conflict error, contact your supplier or service engineer if any of the error codes listed in the following table are displayed on the unit's display panel. If the mode conflict error is displayed and persists, contact your supplier or service engineer. These errors should only be investigated by a professional technician. The descriptions are provided in this manual for reference only.

Content	Display output	Possible causes
Mode conflict	E0	• The indoor unit's operating mode conflicts with that of the outdoor units.
Communication error between indoor and outdoor units	E1	• Communication wires between indoor and outdoor units not connected properly. • Interference from high voltage wires or other sources of electromagnetic radiation. • Communication wire too long. • Damaged main PCB.
Indoor ambient temperature sensor (T1) error	E2	• Temperature sensor not connected properly or has malfunctioned. • Damaged main PCB.
Indoor heat exchanger mid-point temperature sensor (T2) error	E3	
Indoor heat exchanger outlet temperature sensor (T2B) error	E4	
Fan error	E6	• Fan stuck or blocked. • Fan motor not connected properly or has malfunctioned. • Power supply abnormal. • Damaged main PCB.
EEPROM error	E7	• Damaged main PCB.
Indoor EEV coil error	Eb	• Line loosened or broken. • The electronic expansion valve in stuck. • Damaged main PCB.
Outdoor unit error	Ed	• Outdoor unit error.
Water level error	EE	• Water level float stuck. • Water level switch not connected properly. • Damaged main PCB. • Drain pump has malfunctioned.
Indoor unit has not been assigned an address	FE	• Indoor unit has not been assigned an address.

16126000A14978 V1.0