Schakelschema

Page	Title
2	Systeemlay-out
5	Technische gegevenstabel
10-11	Vermogen
30-33	Communicatie interne componenten
40	Digitale ingangen
50	Digitale uitgangen
60	Analoge ingangen
70	Analoge uitgangen
80	Universele ingangen
90-94	Externe connectie
100-101	Componenten overzicht

Project:
Client:
Adress:
Date:

AHU Type:Topvex
Model:SR/TR 35 M0-100

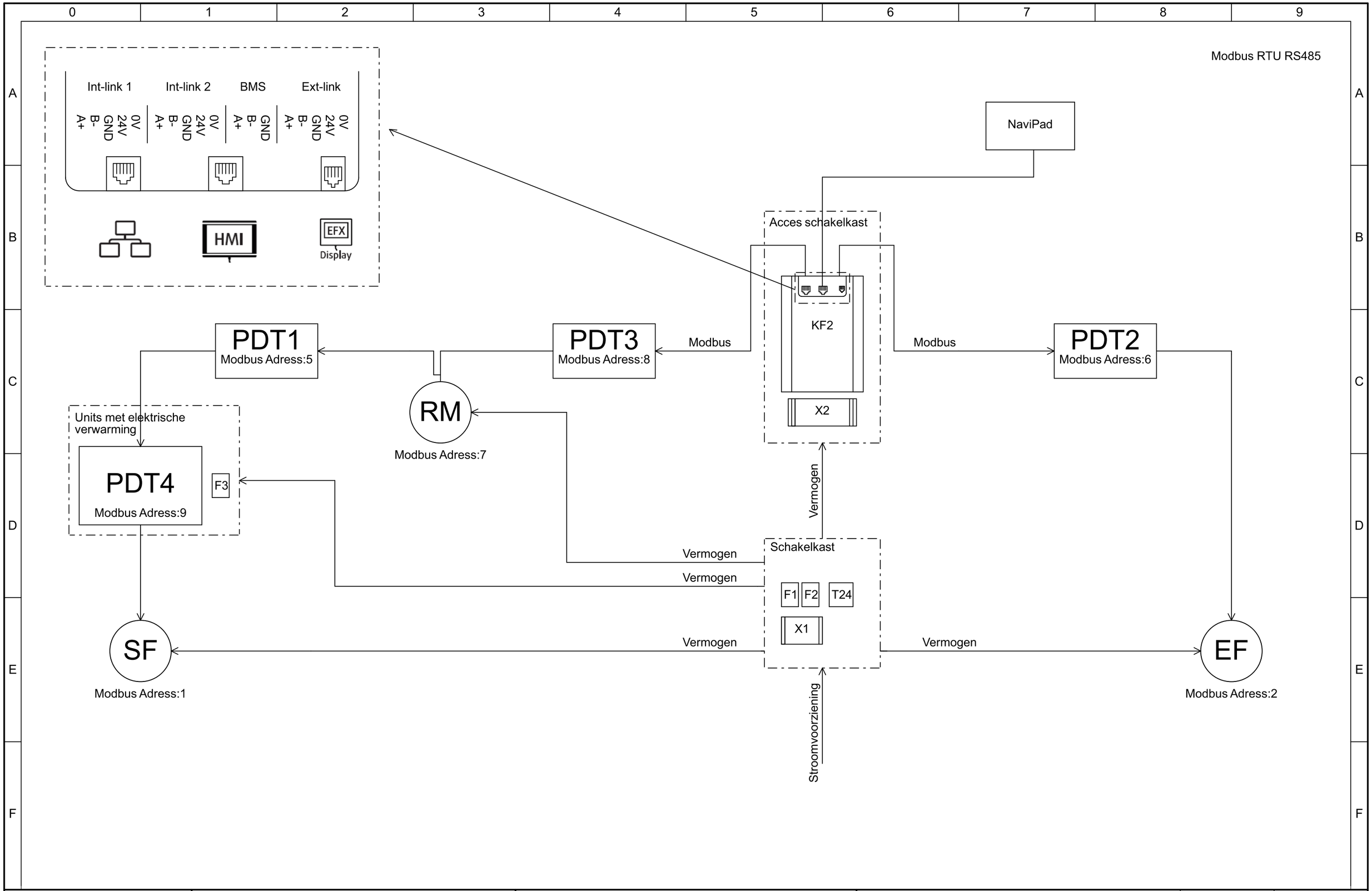

systemair		System layout	Project: WD000157	Rev: A006	Sheet: 2
			Date: 2022-03-25	Revision date: 2023-11-10	Initials: HaJa	Total sheets: 23	Next sheet: 5

0	1	2	3	4	5	6	7	8	9
Luchtbehandelings unit									
Model*	Stroomvoorziening	Voorzekering AHU(A)	Ventilator zekering (A)	Heater zekering(A)	Totaal vermogen verwarmer(A)	Stroomopname ventilatoren (A/Unit)	Stroomopname verwarmer (A)	Nominaal vermogensopname ventilatoren (kW/Unit)	Toevoer ventilator K-factor (m³/h)	Retour ventilator K-factor (m³/h)
SR35 HWL, HWH, N M0	3~400 V+N +PE, 50Hz	3x13	C10			3,8		2,5	121	121
SR35 EL3,5 M0	3~400V+N +PE, 50Hz	3x20	C10	B32	3,5	3,8	5,1	2,5	121	121
SR35 EL7,1 M0	3~400V +PE, 50Hz	3x25	C10	B32	7,1	3,8	10,2	2,5	121	121
SR60 HWL, HWH, N	3~400 V+N +PE, 50Hz	3x13	C10			3,5		2,1	180	180
SR60 EL3,5	3~400V+N +PE, 50Hz	3x16	C10	B32	3,5	3,5	5,1	2,1	180	180
SR60 EL7,1	3~400V+N +PE, 50Hz	3x25	C10	B32	7,1	3,5	10,2	2,1	180	180
SR60 EL10,4	3~400V+N +PE, 50Hz	3x32	C10	B32	10,4	3,5	15,0	2,1	180	180
SR60 HWL, HWH, N M0	3~400V+N +PE, 50Hz	3x13	C10			3,2		2,0	154	154
SR60 EL3,5 M0	3~400V+N +PE, 50Hz	3x16	C10	B32	3,5	3,2	5,1	2,0	154	154
SR60 EL7,1 M0	3~400V+N +PE, 50Hz	3x25	C10	B32	7,1	3,2	10,2	2,0	154	154
SR70 HWL, HWH, N	3~400 V +PE, 50Hz	3x13	C10			3,5		2,1	180	180
SR70 EL3,5	3~400V+N +PE, 50Hz	3x16	C10	B32	3,5	3,5	5,1	2,1	180	180
SR70 EL10,4	3~400V+N +PE, 50Hz	3x32	C10	B32	10,4	3,5	15,1	2,1	180	180
SR70 EL14,2	3~400V+N +PE, 50Hz	3x35	C10	B32	14,2	3,5	20,4	2,1	180	180
SR70 HWL, HWH, N M0	3~400 V +PE, 50Hz	3x13	C10			3,5		2,0	154	154
SR70 EL3,5 M0	3~400V+N +PE, 50Hz	3x25	C10	B32	7,1	3,5	5,1	2,0	154	154
SR70 EL10,4 M0	3~400V+N +PE, 50Hz	3x32	C10	B32	10,4	3,5	15,1	2,0	154	154
SR80 HWL, HWH, N	3~400V+N +PE, 50Hz	3x16	C10			2,1		2,1	180	180
SR80 EL5,2	3~400V+N +PE, 50Hz	3x25	C10	B32	5,2	3,5	7,5	2,1	180	180
SR80 EL 12,3	3~400V+N +PE, 50Hz	3x35	C10	B32	12,3	3,5	17,8	2,1	180	180
SR80 EL 19,4	3~400V+N +PE, 50Hz	3x50	C10	B32	19,4	3,5	28	2,1	180	180
SR80 HWL, HWH, N M0	3~400V+N +PE, 50Hz	3x25	C16			6,2		4,1	154	154
SR80 EL5,2 M0	3~400V+N +PE, 50Hz	3x32	C16	B32	5,2	6,2	7,5	4,1	154	154
SR80 EL 12,3 M0	3~400V+N +PE, 50Hz	3x40	C16	B32	12,3	6,2	17,8	4,1	154	154
SR 100 HWL, HWH, N	3~400V+N +PE, 50Hz	3x16	C10			3,7		3,3	220	220
SR 100 EL7,1	3~400V+N +PE, 50Hz	3x32	C10	B32	7,1	3,7	10,2	3,3	220	220
SR 100 EL 15,7	3~400V+N +PE, 50Hz	3x40	C10	B32	15,7	3,7	22,3	3,3	220	220
SR 100 EL 24,6	3~400V+N +PE, 50Hz	3x63	C10	B40	24,6	3,7	35,5	3,3	220	220
SR 100 HWL, HWH, N M0	3~400V+N +PE, 50Hz	3x25	C20			8,4		5,6	197	197
SR 100 EL7,1 M0	3~400V+N +PE, 50Hz	3x35	C20	B32	7,1	8,4	10,2	5,6	197	197
SR 100 EL 15,7 M0	3~400V+N +PE, 50Hz	3x50	C20	B40	15,7	8,4	22,6	5,6	197	197

Model type: S-SC20-L-N-ePM1/60-CE-"X"-"Y"-"Z"-ePM10/60-AC
X = Exhanger damper type; B = Bypass, S = Section defrosting
Y = Fan wheel type; C1 = Compsite, M0 = Metal wheel

Z = Heater type; HWL = Water coil low power, HWH = Water coil high power
EL4,2 = Electrical heater 4,2kW, N = No heater

* Omschrijving AHU totale opname zonder circulatie pomp

0	1	2	3	4	5	6	7	8	9
Luchtbehandelings unit									
Model*	Stroomvoorziening	Voorzekering AHU(A)	Ventilator zekering (A)	Heater zekering(A)	Totaal vermogen verwarmer(A)	Stroomopname ventilatoren (A/Unit)	Stroomopname verwarmer (A)	Nominaal vermogensopname ventilatoren (kW/Unit)	Toevoer ventilator K-factor (m³/h)	Retour ventilator K-factor (m³/h)
TR35 HWL, HWH, N M0	3~400 V+N +PE, 50Hz	3x13	3xC10			3,8		2,5	122	120
TR35 EL3,5 M0	3~400V+N +PE, 50Hz	3x20	3xC10	B32	3,5	3,8	5,1	2,5	122	120
TR35 EL7,1 M0	3~400V +PE, 50Hz	3x25	3xC10	B32	7,1	3,8	10,2	2,5	122	120
TR60 HWL, HWH, N	3~400 V+N +PE, 50Hz	3x13	3xC10			3,5		2,1	172	185
TR60 EL3,5	3~400V+N +PE, 50Hz	3x16	3xC10	B32	3,5	3,5	5,1	2,1	172	185
TR60 EL7,1	3~400V+N +PE, 50Hz	3x25	3xC10	B32	7,1	3,5	10,2	2,1	172	185
TR60 EL10,4	3~400V+N +PE, 50Hz	3x32	3xC10	B32	10,4	3,5	15,1	2,1	172	185
TR60 HWL, HWH, N M0	3~400V+N +PE, 50Hz	3x13	3xC10			3,2		2,0	148	161
TR60 EL3,5 M0	3~400V+N +PE, 50Hz	3x16	3xC10	B32	3,5	3,2	5,1	2,0	148	161
TR60 EL7,1 M0	3~400V+N +PE, 50Hz	3x25	3xC10	B32	7,1	3,2	10,2	2,0	148	161
TR70 HWL, HWH, N	3~400 V +PE, 50Hz	3x13	3xC10			3,5		2,1	173	171
TR70 EL3,5	3~400V+N +PE, 50Hz	3x16	3xC10	B32	3,5	3,5	5,1	2,1	173	171
TR70 EL10,4	3~400V+N +PE, 50Hz	3x32	3xC10	B32	10,4	3,5	15,1	2,1	173	171
TR70 EL14,2	3~400V+N +PE, 50Hz	3x35	3xC10	B32	14,2	3,5	20,4	2,1	173	171
TR70 HWL, HWH, N M0	3~400 V +PE, 50Hz	3x13	3xC10			3,5		2,0	152	150
TR70 EL3,5 M0	3~400V+N +PE, 50Hz	3x25	3xC10	B32	7,1	3,5	10,2	2,0	152	150
TR70 EL10,4 M0	3~400V+N +PE, 50Hz	3x32	3xC10	B32	10,4	3,5	15,1	2,0	152	150
TR80 HWL, HWH, N	3~400V+N +PE, 50Hz	3x16	3xC10			2,1		2,1	170	171
TR80 EL5,2	3~400V+N +PE, 50Hz	3x25	3xC10	B32	5,2	3,5	7,5	2,1	170	171
TR80 EL 12,3	3~400V+N +PE, 50Hz	3x35	3xC10	B32	12,3	3,5	17,8	2,1	170	171
TR80 EL 19,4	3~400V+N +PE, 50Hz	3x50	3xC10	B32	19,4	3,5	28	2,1	170	171
TR80 HWL, HWH, N M0	3~400V+N +PE, 50Hz	3x25	3xC16			6,2		4,1	145	143
TR80 EL5,2 M0	3~400V+N +PE, 50Hz	3x32	3xC16	B32	5,2	6,2	7,5	4,1	145	143
TR80 EL 12,3 M0	3~400V+N +PE, 50Hz	3x40	3xC16	B32	12,3	6,2	17,8	4,1	145	143

Model type: S-SC20-L-N-ePM1/60-CE-"X"-"Y"-"Z"-ePM10/60-AC
X = Exhanger damper type; B = Bypass, S = Section defrosting
Y = Fan wheel type; C1 = Compsite, M0 = Metal wheel

Z = Heater type; HWL = Water coil low power, HWH = Water coil high power
EL4,2 = Electrical heater 4,2kW, N = No heater

* Omschrijving AHU totale opname zonder circulatie pomp

Gemeenschappelijke gegevens	
Regeling zekering (A)	C10
AC/DC converter T24 (W)	150
Max. Kabelgebied connector 51-66	0,25-2,5
Max. Kabelgebiedconnector 1-43,071-84	0,2-1,5
BMS intlink	0,2-1,5
Max. Kabelgebiedconnector X1 (mm²)	0,5...16
Max. Kabelgebiedconnector X2 (mm²)	0,25...4

Color code	
Black	Bk
Brown	Bn
Red	Rd
Orange	Og
Yellow	Ye
Green	Gn
Blue	Bu
Violet	Vt
Grey	Gy
White	Wh
Pink	Pk
Green/Yellow	GnYe

Omschrijving AHU totale opname zonder circulatie pomp

Model type: S-SC20-L-N-ePM1/60-CE-"X"-"Y"-"Z"-ePM10/60-AC
X = Exhanger damper type; B = Bypass, S = Section defrosting
Y = Fan wheel type; C1 = Compsite, M0 = Metal wheel

Z = Heater type; HWL = Water coil low power, HWH = Water coil high power
EL4,2 = Electrical heater 4,2kW, N = No heater

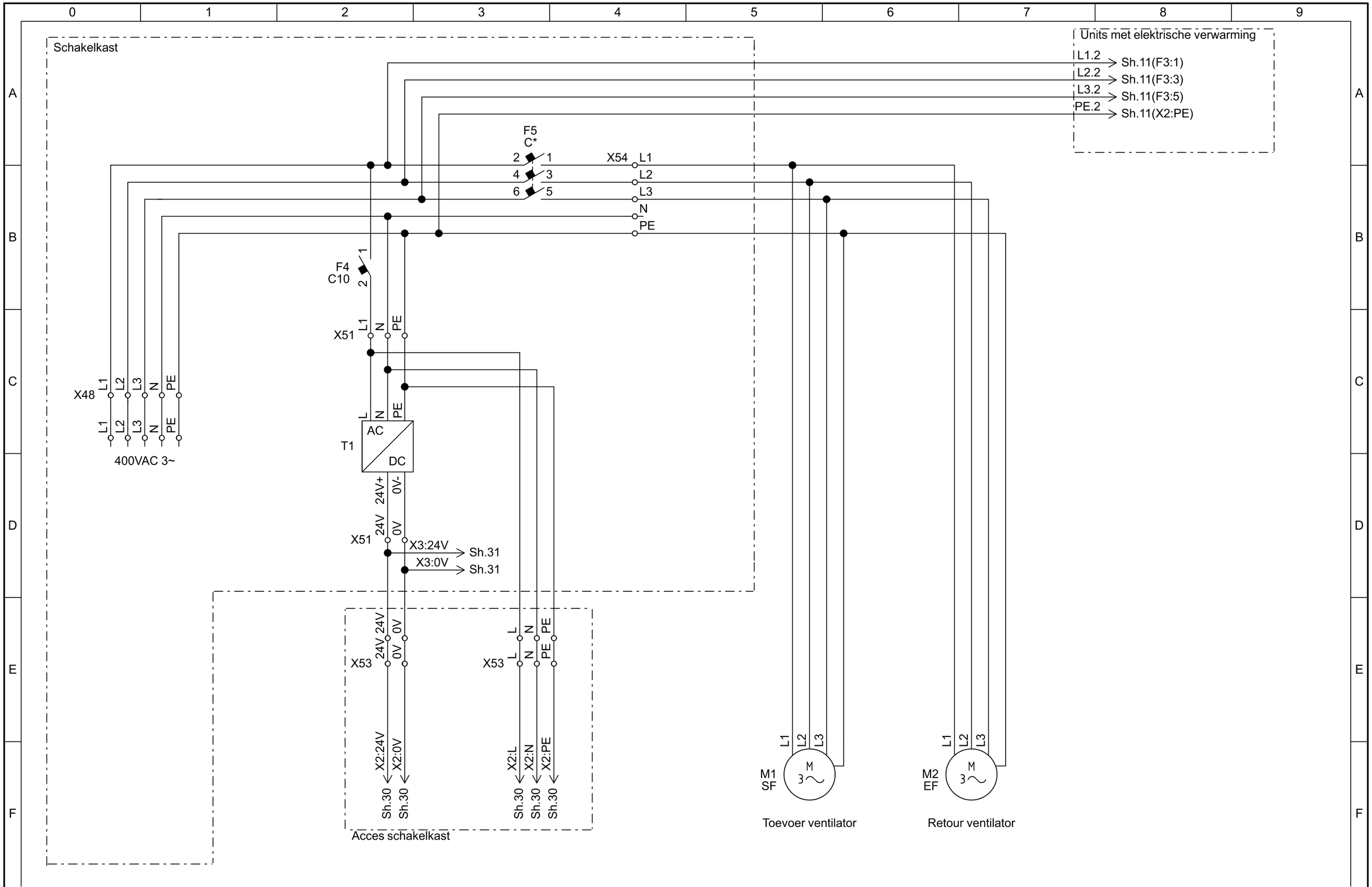

systemair		Power	Project: WD000157	Rev: A006	Sheet: 10
			Date: 2022-03-25	Revision date: 2023-11-10	Initials: HaJa	Total sheets: 23	Next sheet: 11

Units met elektrische verwarming

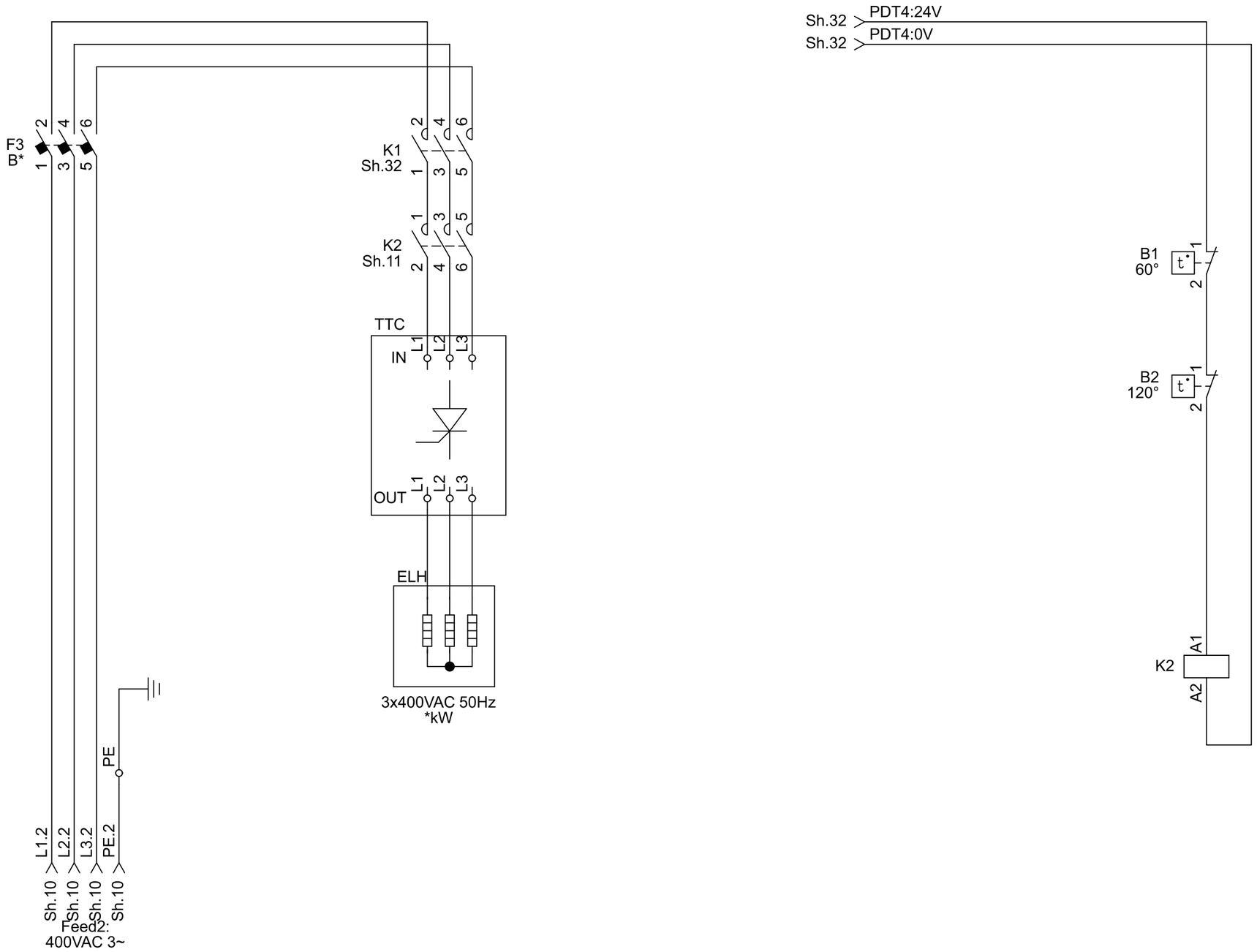

systemair		Power	Project: WD000157	Rev: A006	Sheet: 11
			Date: 2022-03-25	Revision date: 2023-11-10	Initials: HaJa	Total sheets: 23	Next sheet: 30

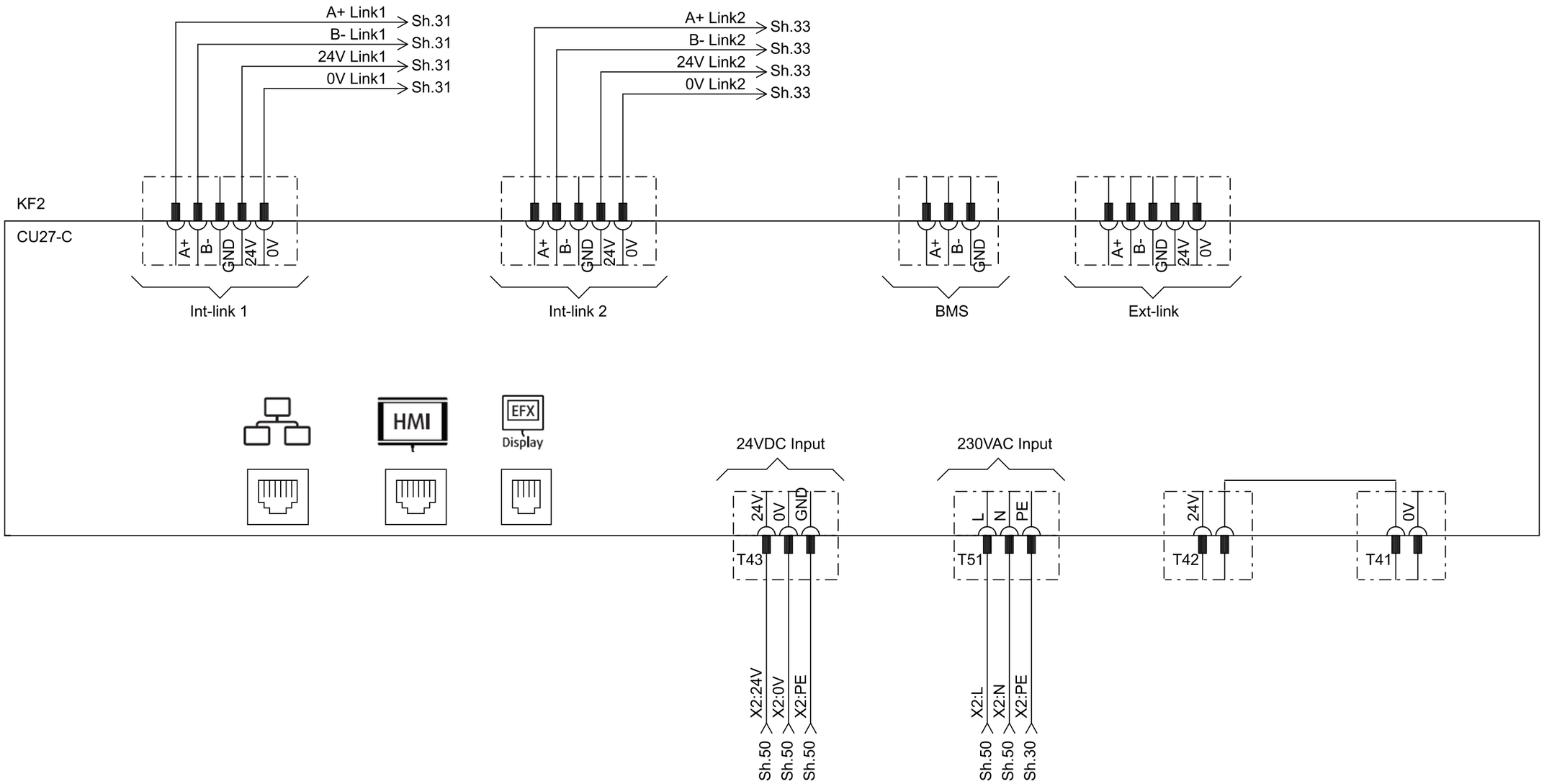

systemair		Communication internal components	Project: WD000157	Rev: A006	Sheet: 30
			Date: 2022-03-25	Revision date: 2023-11-10	Initials: HaJa	Total sheets: 23	Next sheet: 31

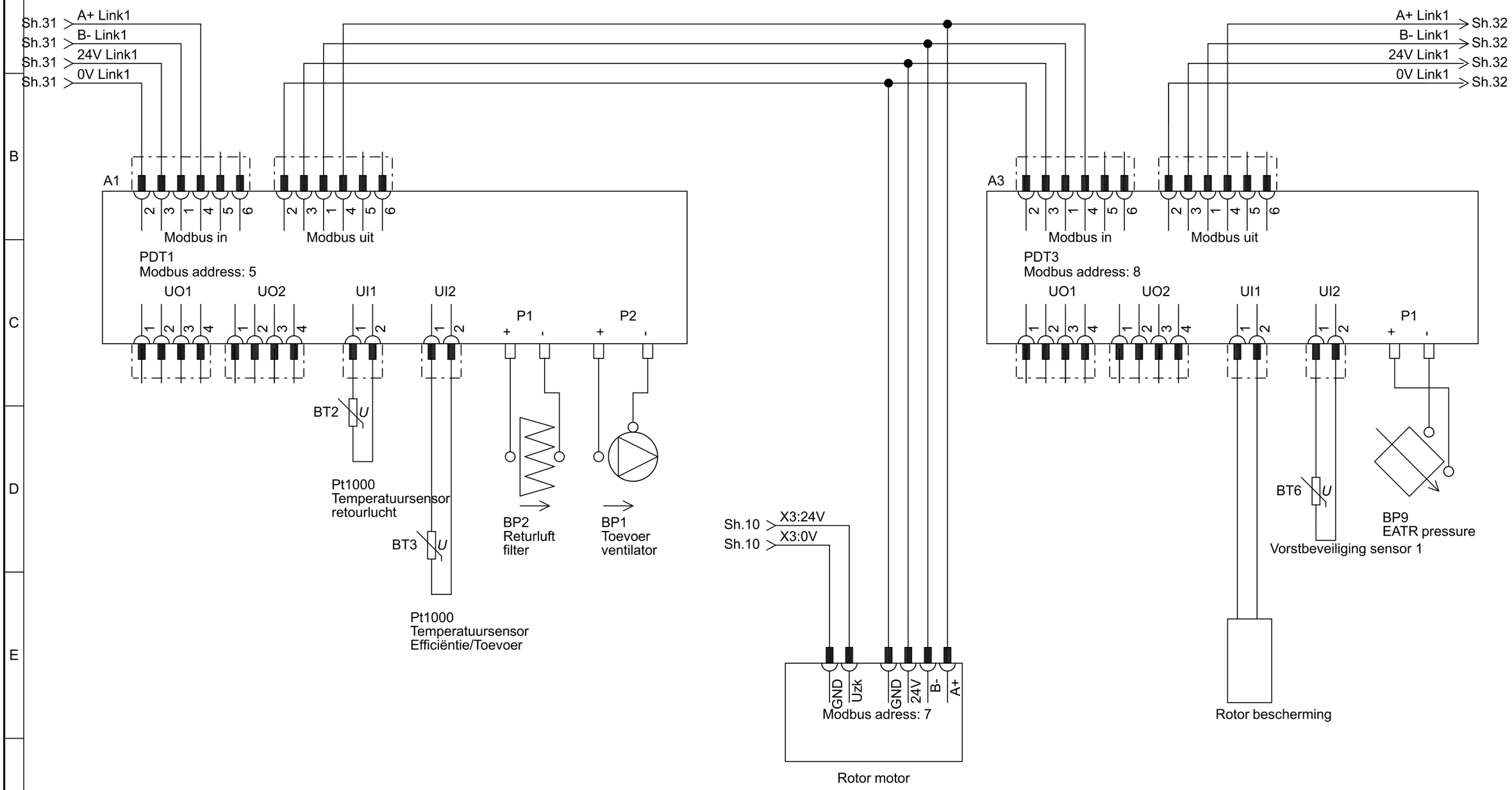

systemair		Communication internal components	Project: WD000157	Rev: A006	Sheet: 31
			Date: 2022-03-25	Revision date: 2023-11-10	Initials: HaJa	Total sheets: 23	Next sheet: 32

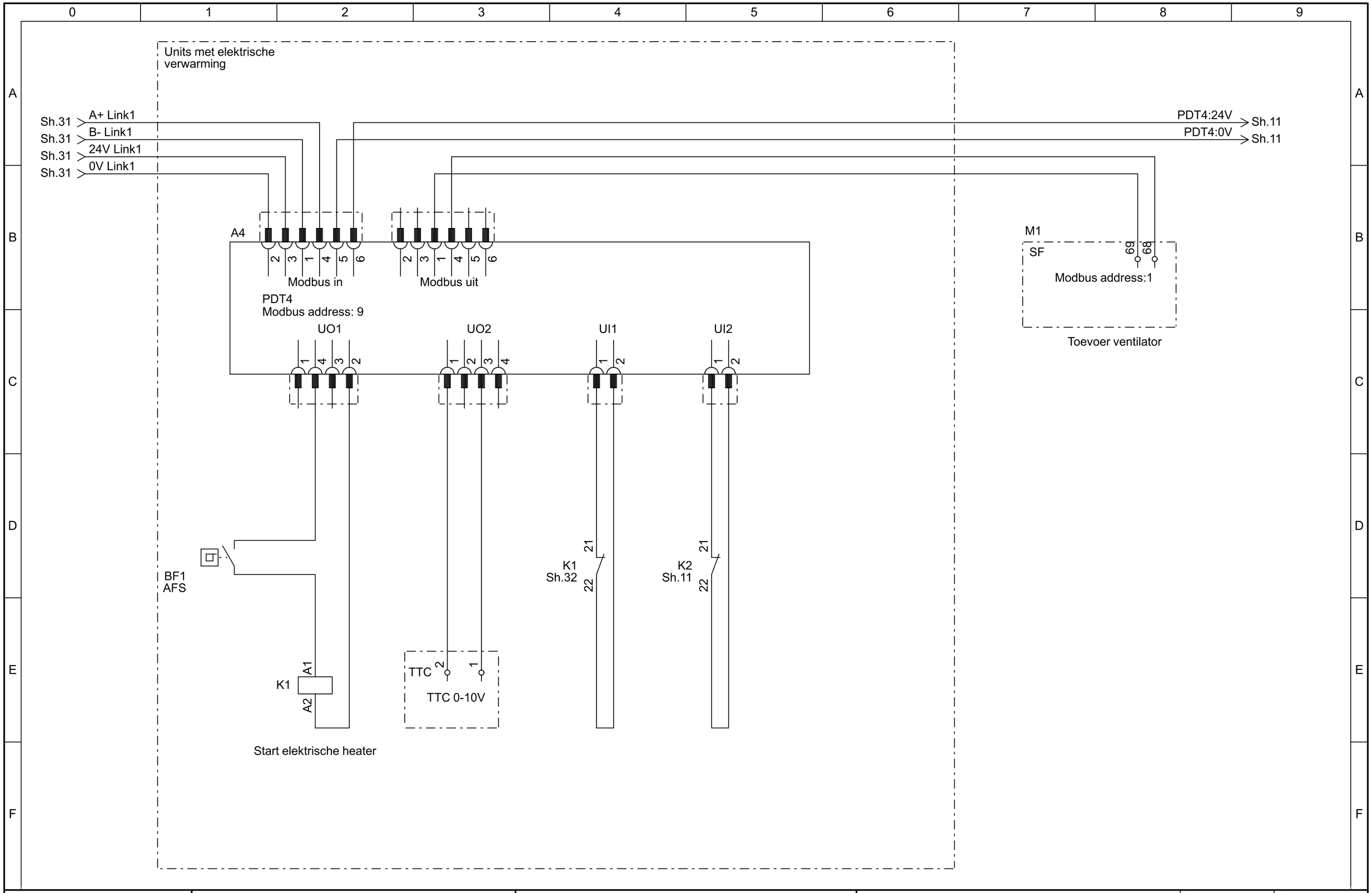

systemair		Communication internal components	Project: WD000157	Rev: A006	Sheet: 32
			Date: 2022-03-25 / Revision date: 2023-11-10 / Initials: HaJa	Total sheets: 23	Next sheet: 33

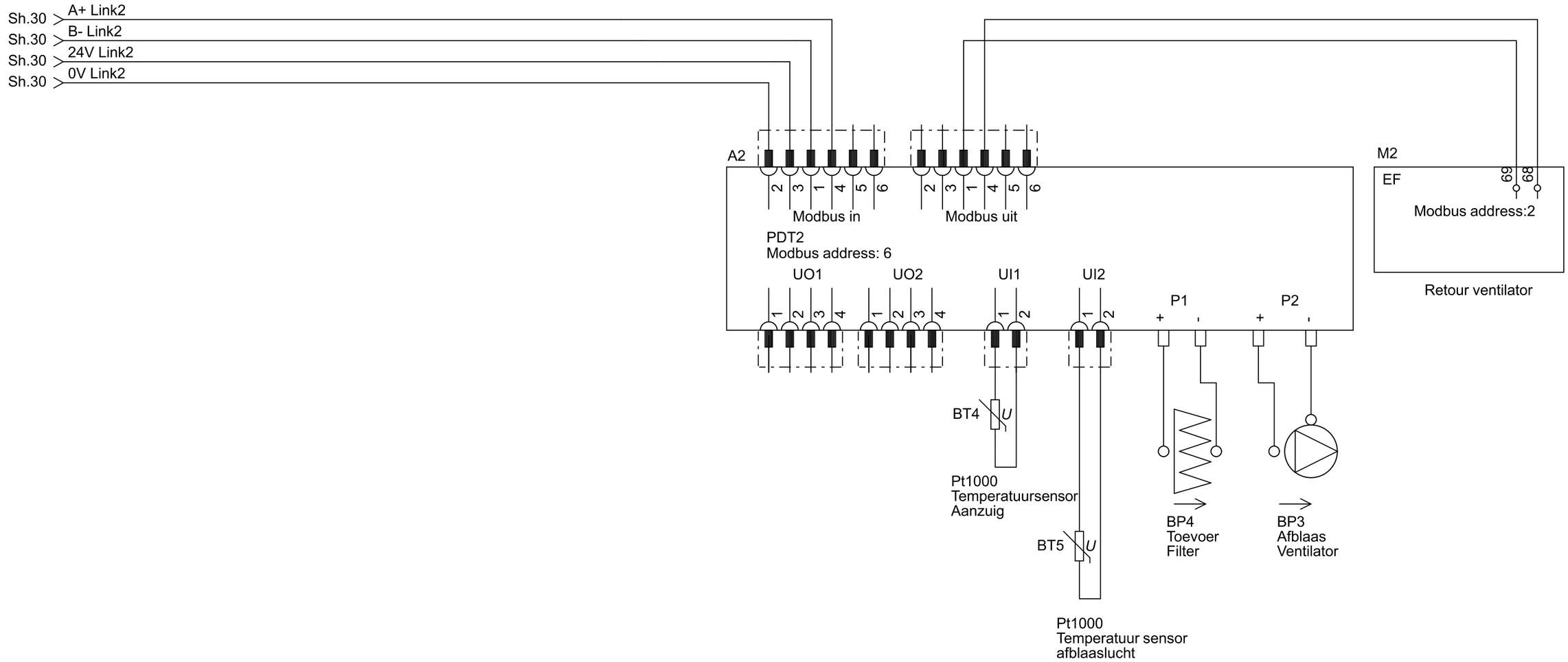

systemair		Communication internal components	Project: WD000157	Rev: A006	Sheet: 33
			Date: 2022-03-25 / Revision date: 2023-11-10 / Initials: HaJa	Total sheets: 23	Next sheet: 40

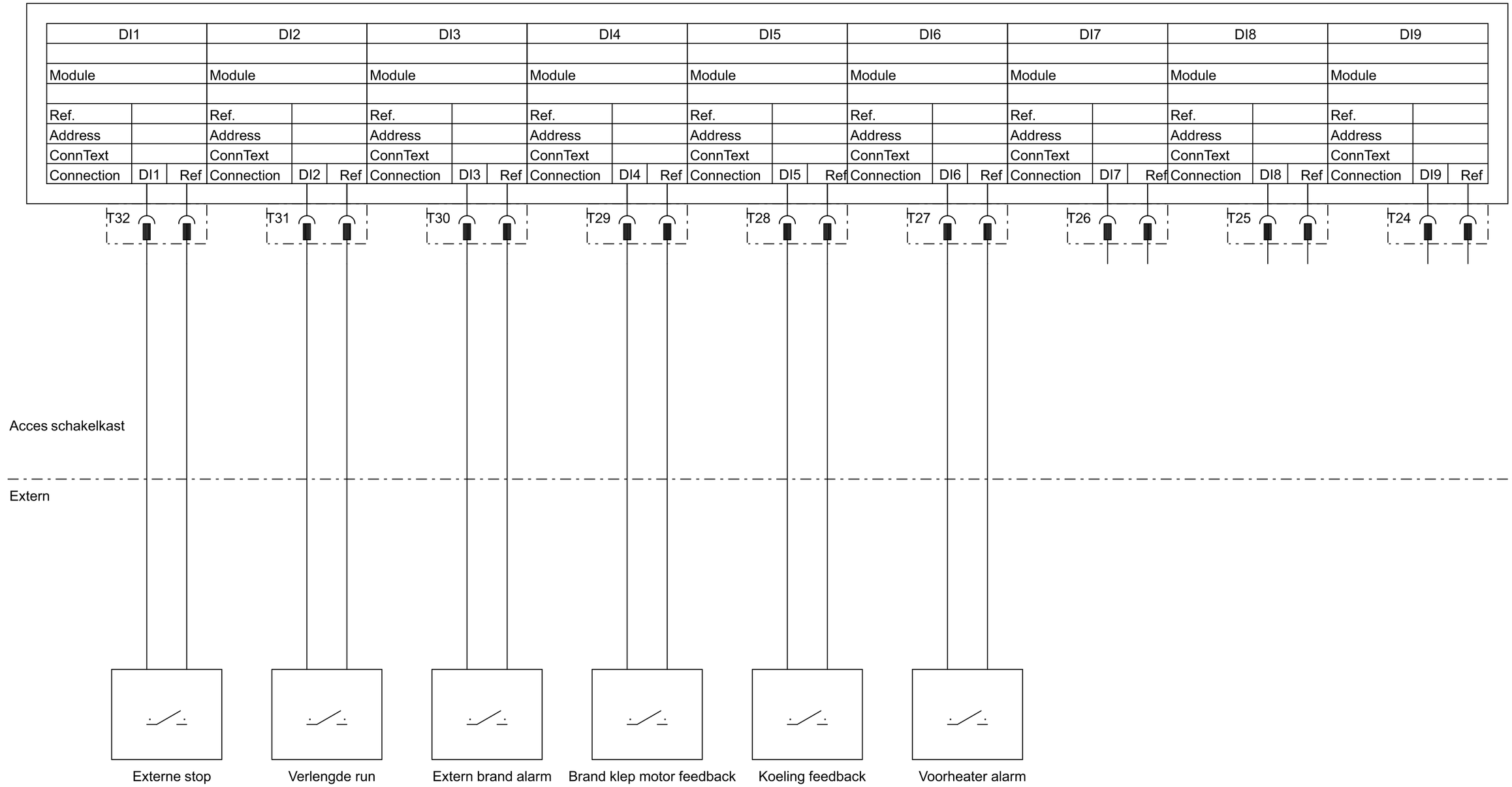

systemair

Digital inputs

Project:			Rev:	Sheet:
WD000157			A006	40
Date: 2022-03-25	Revision date: 2023-11-10	Initials: HaJa	Total sheets: 23	Next sheet: 50

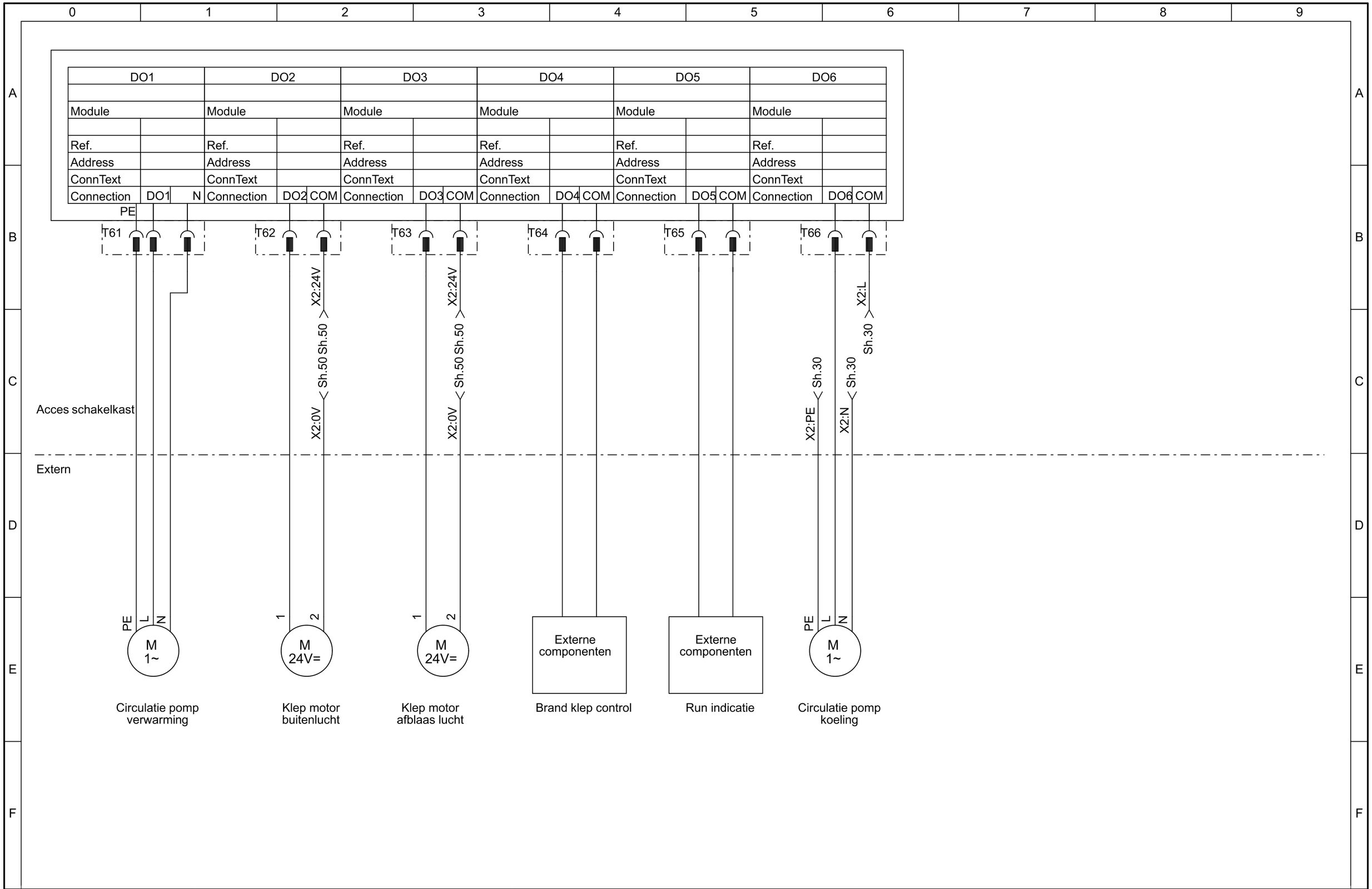

systemair		Digital outputs	Project: WD000157	Rev: A006	Sheet: 50
			Date: 2022-03-25 / Revision date: 2023-11-10 / Initials: HaJa	Total sheets: 23	Next sheet: 60

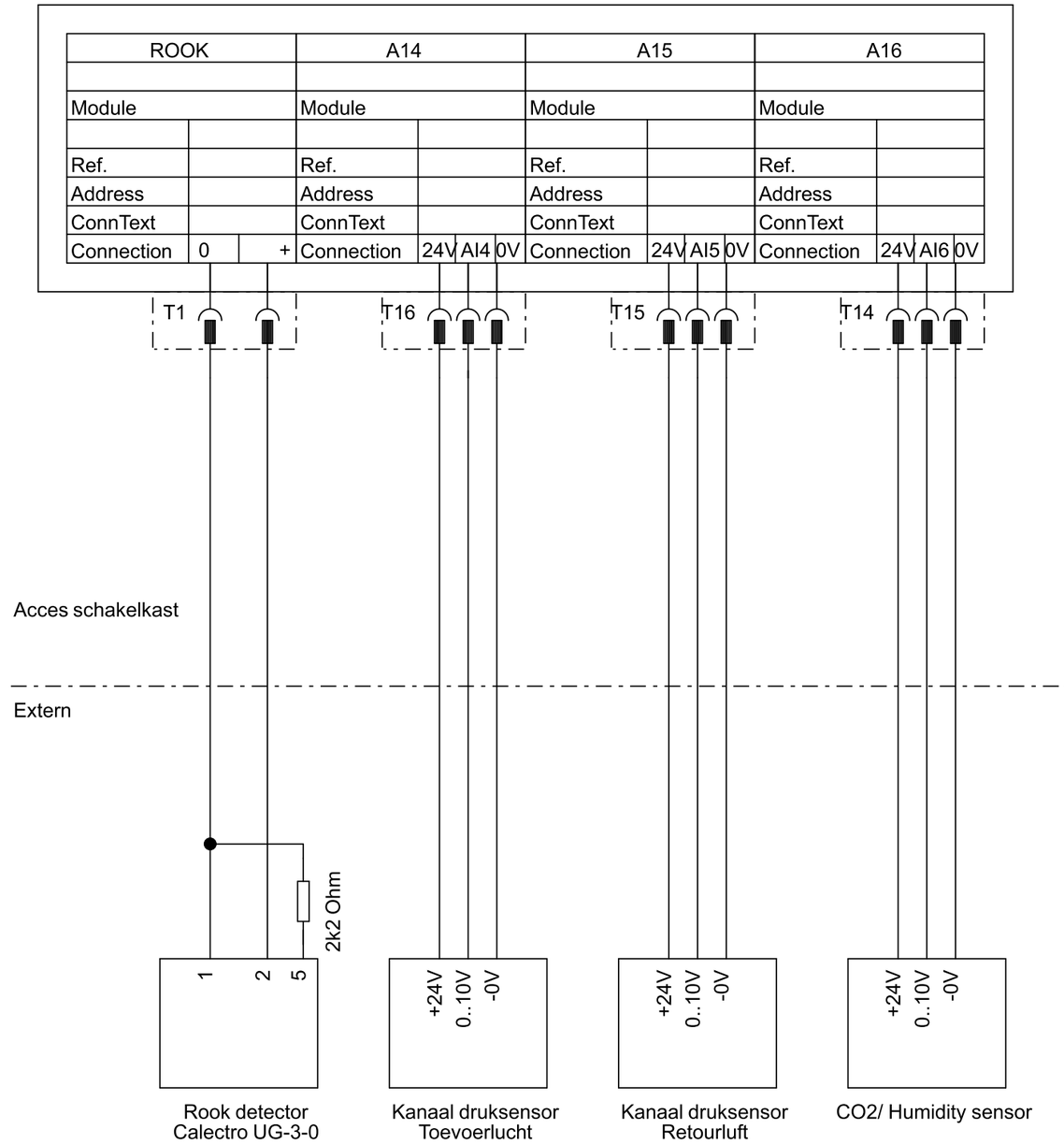

systemair	Analog inputs	Project: WD000157		Rev: A006	Sheet: 60
		Date: 2022-03-25	Revision date: 2023-11-10	Initials: HaJa	Total sheets: 23	Next sheet: 70

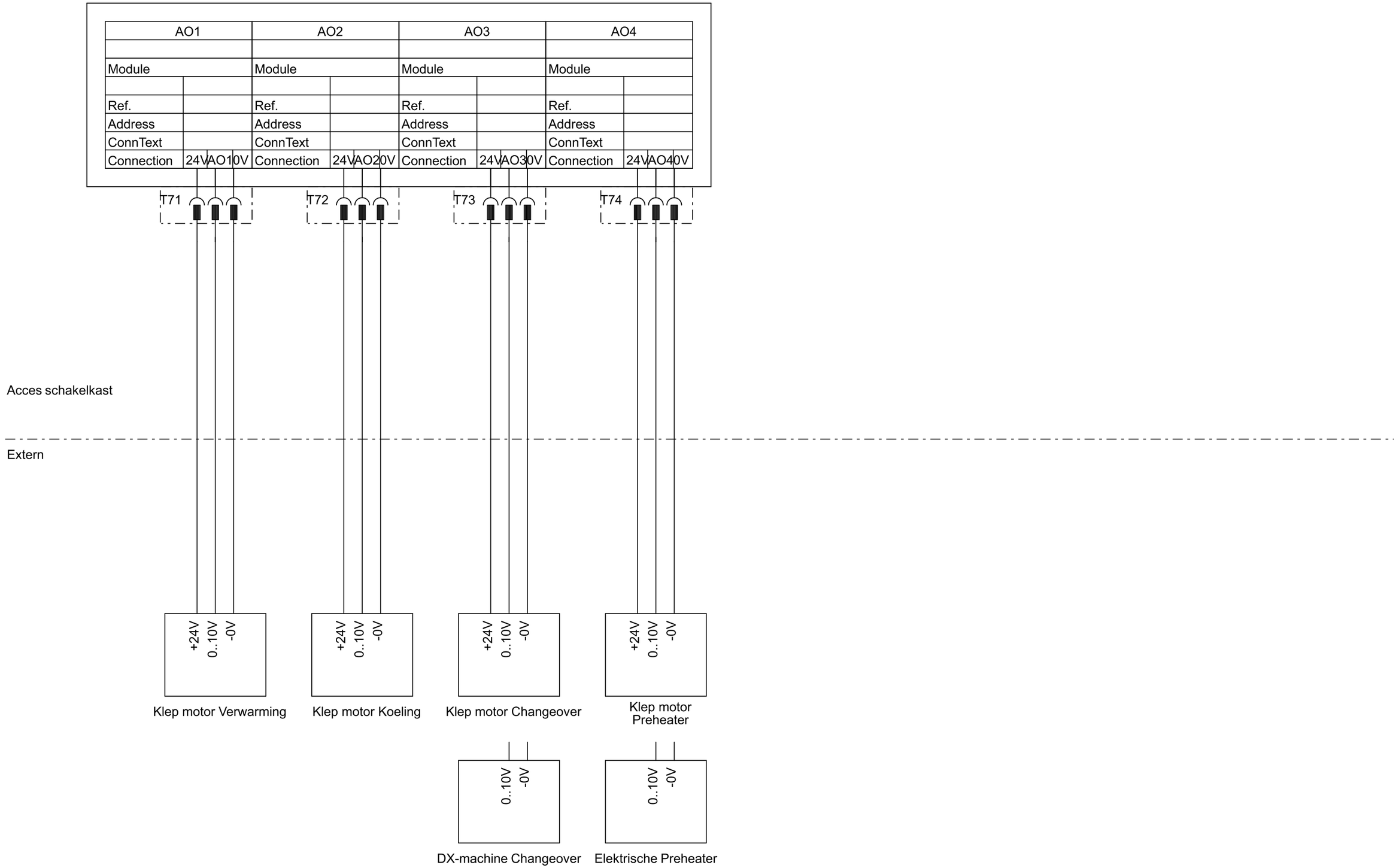

systemair	Analog outputs	Project: WD000157		Rev: A006	Sheet: 70
		Date: 2022-03-25	Revision date: 2023-11-10	Initials: HaJa	Total sheets: 23	Next sheet: 80

UI1					UI2					UI3					UI4				
Module					Module					Module					Module				
	CU27-C					CU27-C					CU27-C					CU27-C			
Ref.					Ref.					Ref.					Ref.				
Address					Address					Address					Address				
ConnText	0.0				ConnText	0.0				ConnText	0.0				ConnText	0.0			
Connection	24V	UI1	0V	Ref	Connection	24V	UI2	0V	Ref	Connection	24V	UI3	0V	Ref	Connection	24V	UI4	0V	Ref

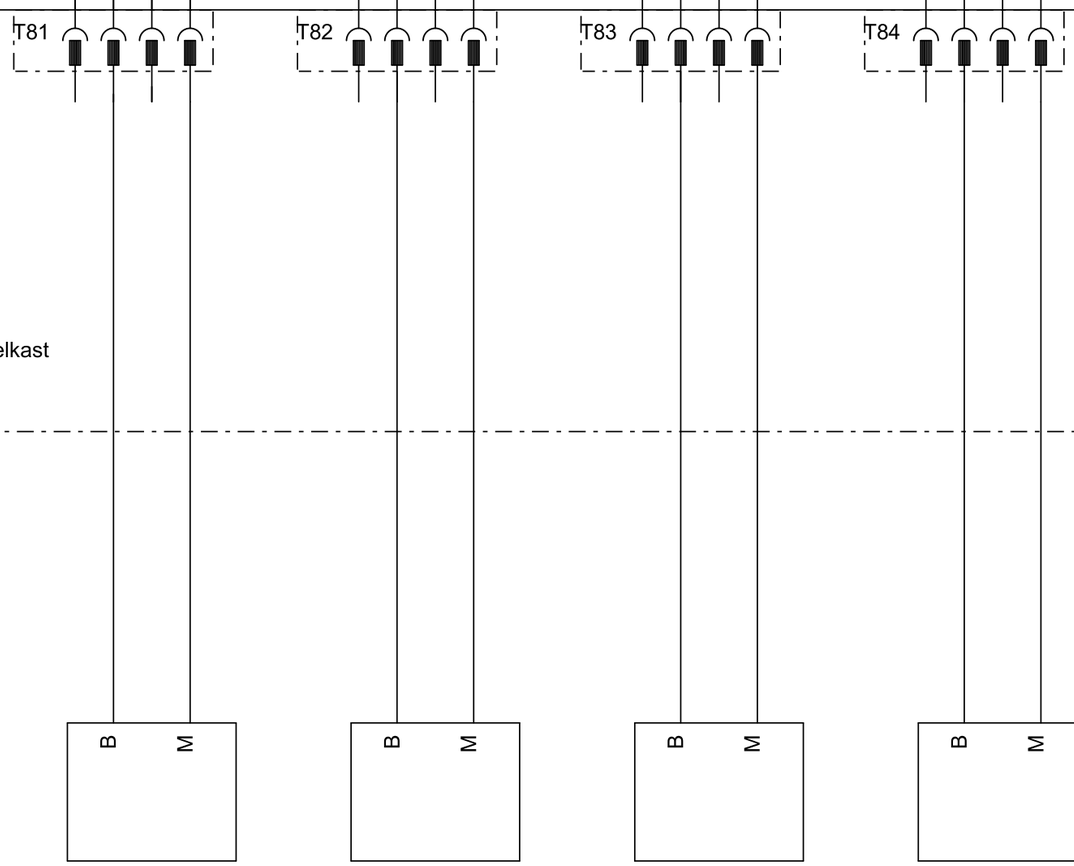

Pt1000
Temperatuursensor
Toevoerlucht

Pt1000
Temperatuursensor
buitenlucht

Pt1000
Temperatuursensor
Ruum

Pt1000
Temperatuursensor
Preheater

systemair		Universal inputs	Project: WD000157	Rev: A006	Sheet: 80
			Date: 2022-03-25 / Revision date: 2023-11-10 / Initials: HaJa	Total sheets: 23	Next sheet: 90

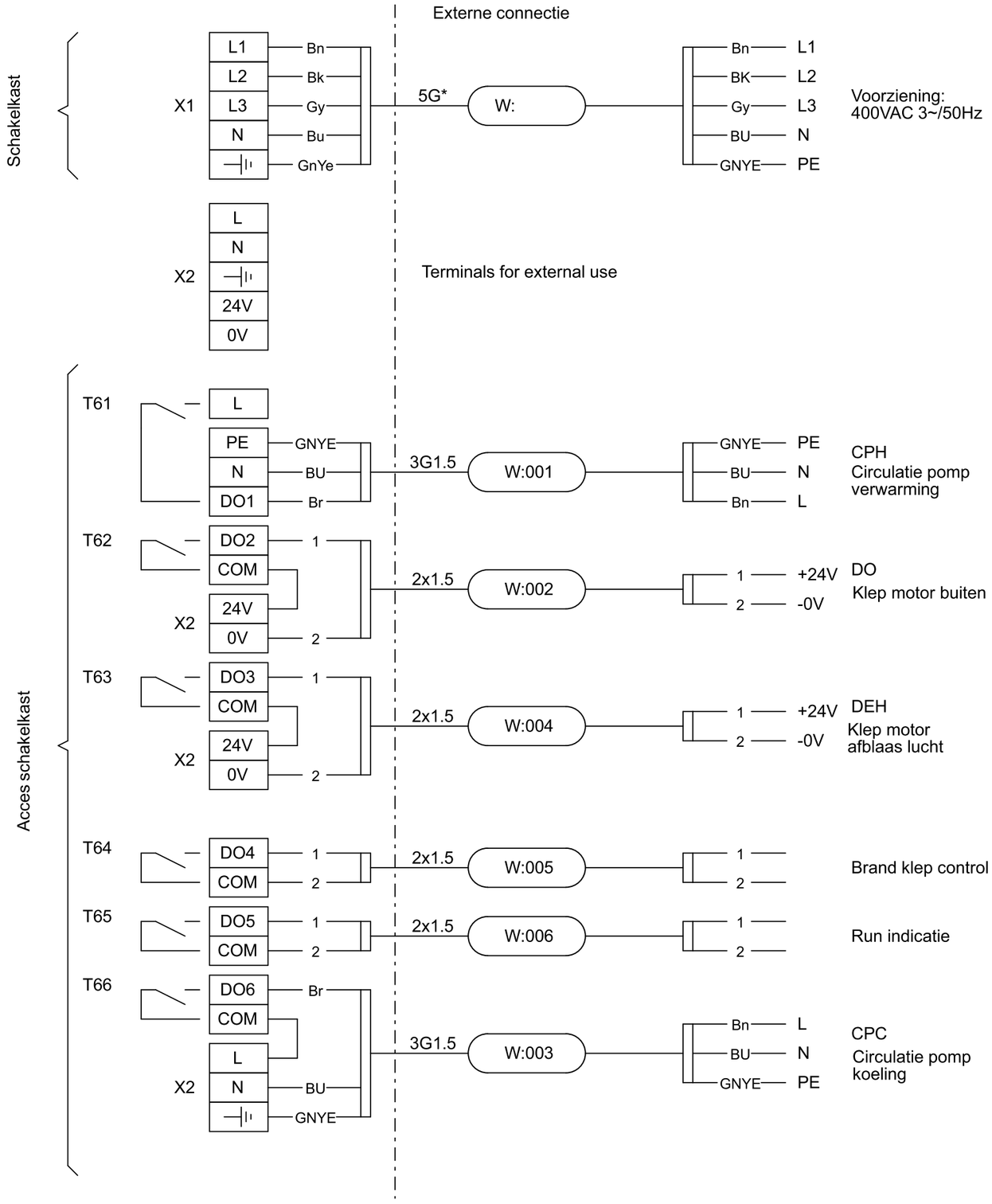

T61-T66
Digitale uitgangen
Maks 4A 230VAC

Note: Recommended cable areas only.
Dimension cable according to local regulation.

systemair	External connections	Project: WD000157		Rev: A006	Sheet: 90
		Date: 2022-03-25	Revision date: 2023-11-10	Initials: HaJa	Total sheets: 23	Next sheet: 91

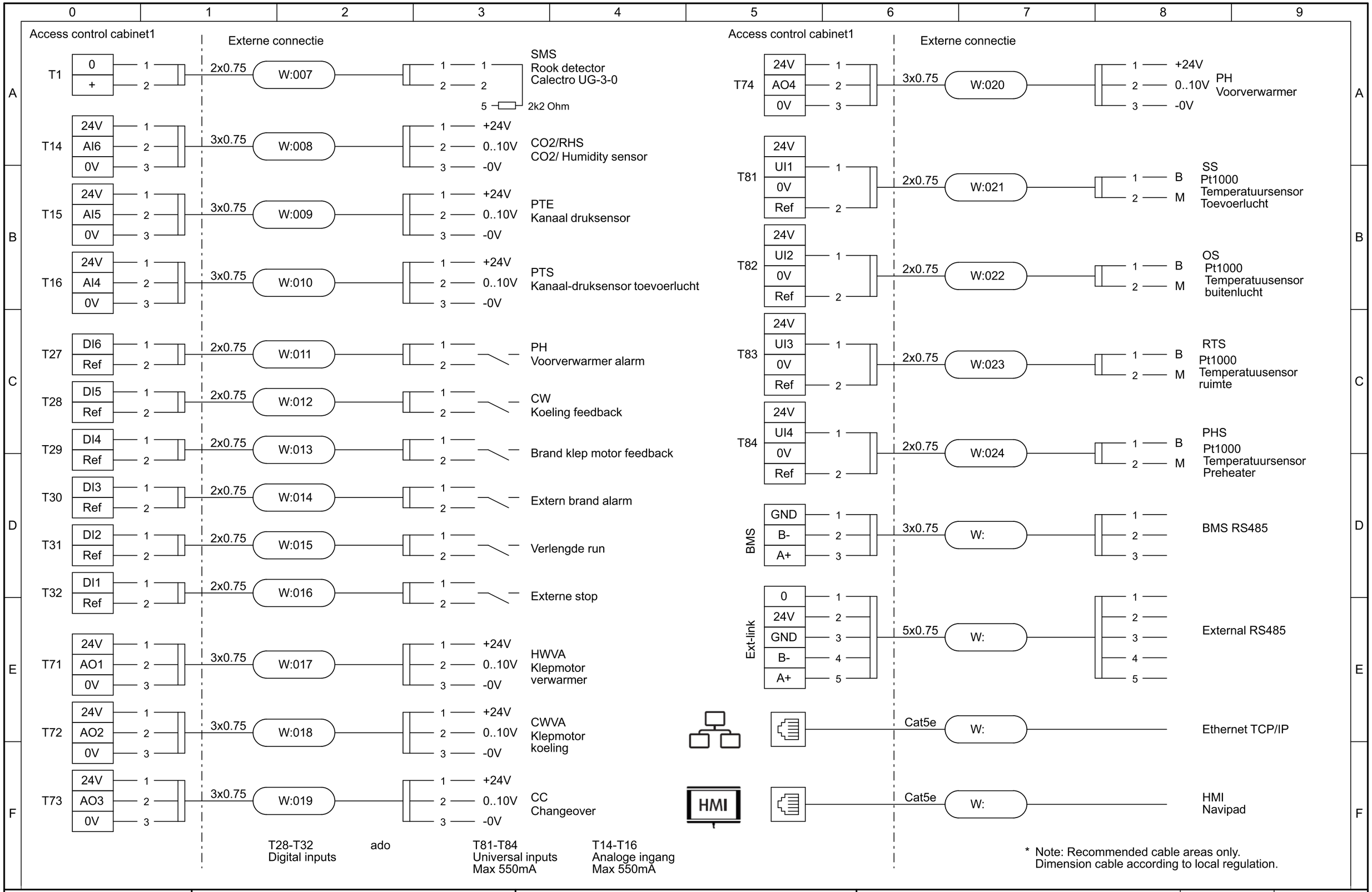

systemair	External connections	Project: WD000157		Rev: A006	Sheet: 91
		Date: 2022-03-25	Revision date: 2023-11-10	Initials: HaJa	Total sheets: 23	Next sheet: 92

0	1	2	3	4	5	6	7	8	9

	Aansluiting Topvex		Externe connectie		Omschrijving	Bedrading			
	Contact	Terminal	Object	Terminal		Part#	Type	ID	
	Stroomvoorziening								
A	Schakelkast	X1:L1	Voorziening: 400VAC 3~/50Hz	L1	afmeting kabel volgens lokale regelgeving	Bn	5G*	W:	A
		X1:L2		L2		Bk			
		X1:L3		L3		Gy			
		X1:N		N		Bu			
		X1:PE		PE		GnYe			
B									B
	Analog inputs 0-10V max: 550mA								
	CU27-C T1	+	SMS Rook detector	1	Calectro UG-3-0	1	2x0.75	W:007	
		0		2		2			
C	CU27-C T14	24V	CO2/RHS CO2/ Humidity sensor	+24V		1	3x0.75	W:008	C
		AI6		0..10V		2			
		0V		-0V		3			
	CU27-C T15	24V	PTE Kanaal druksensor	+24V		1	3x0.75	W:009	
		AI5		0..10V		2			
		0V		-0V		3			
D	CU27-C T16	24V	PTS Kanaal-druksensor toevoerlucht	+24V		1	3x0.75	W:010	D
		AI4		0..10V		2			
		0V		-0V		3			
	Digitale ingangen								
	CU27-C T27	DI6	PH Voorverwarmer alarm	NO	Extern contact	1	2x0.75	W:011	
		Ref		COM		2			
	CU27-C T28	DI5	CW Koeling feedback	NO	Extern contact	1	2x0.75	W:012	
		Ref		COM		2			
E	CU27-C T29	DI4	Brand klep motor feedback	NO	Extern contact	1	2x0.75	W:013	E
		Ref		COM		2			
	CU27-C T30	DI3	Extern brand alarm	NO	Extern contact	1	2x0.75	W:014	
		Ref		COM		2			
	CU27-C T31	DI2	Verlengde run	NO	Extern contact	1	2x0.75	W:015	
		Ref		COM		2			
F	CU27-C T32	DI1	Externe stop	NO	Extern contact	1	2x0.75	W:016	F
		Ref		COM		2			

0	1	2	3	4	5	6	7	8	9

Aansluiting Topvex		Externe connectie		Omschrijving	Bedrading		
Contact	Terminal	Object	Terminal		Onderdeel#	Type	ID
Relay outputs max: 230V/4A							
CU27-C T61	DO1	CPH Circulatie pomp verwarming	L		Bn	3G1.5	W:001
	N		N		BU		
	PE		PE		GNYE		
CU27-C T62	DO2	DO Klep motor buiten	+24V		1	2x1.5	W:002
	X2:0V		-0V		2		
CU27-C T63	DO3	DEH Klep motor afblaas lucht	+24V	X2:L - T63:COM Overbrugd	Bn	2x1.5	W:003
	X2:0V		-0V		BU		
CU27-C T64	DO4	DF Brand klep control	-	Brand klep signaal circuit	1	2x1.5	W:004
	COM		-		2		
CU27-C T65	DO5	Run indicatie	-	Run indicatie signaal circuit	1	2x1.5	W:005
	COM		-		2		
CU27-C T66	DO6	CPC Circulatie pomp koeling	L	Som alarm signaal circuit	DO6	3G1.5	W:006
	X2:N		N		N		
	X2:PE		PE		PE		
Analog outputs 0-10V max:750mA							
CU27-C T71	24V	HWVA Klepmotor verwarming	+24V		1	3x0.75	W:017
	AO1		0..10V		2		
	0V		-0V		3		
CU27-C T72	24V	CWVA Klepmotor koeling	+24V		1	3x0.75	W:018
	AO2		0..10V		2		
	0V		-0V		3		
CU27-C T73	24V	CC Changeover	+24V		1	3x0.75	W:019
	AO3		0..10V		2		
	0V		-0V		3		
CU27-C T74	24V	PH Voorverwarmer	+24V		1	3x0.75	W:020
	AO4		0..10V		2		
	0V		-0V		3		

0	1	2	3	4	5	6	7	8	9
Aansluiting Topvex		Externe connectie		Omschrijving				Bedrading	
Contact	Terminal	Object	Terminal					Onderdeel#	Type	ID
Universal inputs max: 550mA										
CU27-C T81	24V	SS Pt1000 Temperatuursensor Toevoerlucht							2x0.75	W:021
	0V									
	UI1		B					1		
	Ref		M					2		
CU27-C T82	24V	OS Pt1000 Temperatuursensor buitenlucht							2x0.75	W:022
	0V									
	UI2		B					1		
	Ref		M					2		
CU27-C T83	24V	RTS Pt1000 Temperatuursensor ruimte							2x0.75	W:023
	0V									
	UI3		B					1		
	Ref		M					2		
CU27-C T84	24V	PHS Pt1000 Temperatuursensor Preheater							2x0.75	W:024
	0V									
	UI4		B					1		
	Ref		M					2		
Communication ports CU27-C										
BMS	GND	BMS RS485	-					1	3x0.75	W:
	B-		-					2		
	A+		-					3		
Ext-link	0V	External RS485	-					1	5x0.75	W:
	24V		-					2		
	GND		-					3		
	B-		-					4		
	A+		-					5		
TCP/IP		Ethernet TCP/IP	-					-	Cat5e	W:
			-					-		
NaviPad	HMI	HMI Navipad	-					-	Cat5e	W:
			-					-		

systemair		External connections	Project: WD000157	Rev: A006	Sheet: 94
			Date: 2022-03-25 / Revision date: 2023-11-10 / Initials: HaJa	Total sheets: 23	Next sheet: 102

Designation	Label	Omschrijving	Misc.
A1	PDT1	PDT Supply PDT24-C	PDT222-2525-C-Q
A2	PDT2	PDT Extract PDT24-C	PDT222-2525-C-Q
A3	PDT3	PDT Exchanger PDT14-C	PDT122-25-C-Q
A4	PDT4	Heater regeling	XDT22-C-Q
A5	DM50-C	Sectie ontdooimodule	
BF1	AFS	Luchtstroombeveiliging	Drukverschil beveiliging 30..300Pa
BP1	PDT1:P1	Toevoerlucht ventilator druk voor luchstroom berekening	
BP2	PDT1:P2	Filter retourlucht druk	
BP3	PDT2:P1	Afblaaslucht ventilator druk voor luchtstroomberekening	
BP4	PDT2:P2	Filter toevoerlucht druk	
BP9	PDT3:P1	Differential pressure extract air/supply air EATR	
BT1	SS	Toevoerlucht temperatuur	Pt1000
BT2	ETS	Retourlucht temperatuur	Pt1000
BT3	EFS	Efficiëntie temperatuur	Pt1000
BT4	OS	Aanzuig temperatuur	Pt1000
BT5	EHS	Afblaaslucht temperatuur	Pt1000
BT6	FPS	Frost protection sensor 1 (Only HW units, immersion sensor pre-mounted on HW-coil from supplier)	
BT10	OT	Thermostaat oververhitting 60º	Automatische reset
BT11	ET	Noodthermostaat 120 °	Handmatige reset
M1	SF	Toevoer ventilator	
M2	EF	Retour ventilator	
CU27-C	KF2	Regelunit CU27-C	
T24	T24	Stroomvoorziening 230VAC/24VDC	
TTC	TTC	Thyristor kaart	TTC40F
K1	K1	Relais 1: st step control	AF26-30-00
K2	K2	Relais 2:st step veiligheid	AF26-30-00
CAL4-11		Hulpcontact	
CAL4-11		Hulpcontact	
F1	F1	MCB Motoren	ABB S203
F2	F2	MCB 24VDC Stroomvoorziening	ABB S201
F3	F3	MCB Heater	ABB S203
X1	X1	Klemmen elektrische aansluitbox WAGO topjob	Terminal WAGO Topjob 2002
X2	X2	Klemmen Access regelklast WAGO topjob	Terminal WAGO Topjob 2002

Designation	Label	Omschrijving	Misc.
SMS		Rook detector	Calectro UG-3-0
PTS		Kanaal-druksensor toevoerlucht	
PTE		Kanaal-druksensor retourlucht	
OS		Temperatuursensor buitenlucht	Pt1000
PHS		Temperatuursensor Preheater	Pt1000
RTS		Temperatuursensor ruimte	Pt1000
CO2		CO2 sensor	
RHS		Vochtsensor	
DEH		Klepmotor buitenlucht	
DO		Klepmotor afblaaslucht	
DF		Klepmotor brand	
HWVA		Klepmotor verwarming	
CWVA		Klepmotor koeling	
CC		Changeover batterij	
CPH		Circulatie pomp verwarming	
CPC		Circulatie pomp koeling	
PH		Voorverwarmer	
HMI		NaviPad	PD70-C